專業.創新.誠信.專業.創新.誠信.專業.創新.誠信.

Content

General Data

Performance scope ---- 2
Product range ---- 3
Pump ---- 4
Max. working pressure ---- 5
Max. Ambient temperature ---- 5
Curve illustration ---- 6
Performance curve ---- 6
Min. Inlet pressure NPSH ---- 7
Operation in parallel ---- 7
Material ---- 8

Technical Data

CV/CVS 1,50Hz ---- 12
CV/CVS 2,50Hz ---- 13
CV/CVS 3,50Hz ---- 14
CV/CVS 4,50Hz ---- 15
CV/CVS 8,50Hz ---- 16
CV/CVS 12,50Hz ---- 17
CV/CVS 16,50Hz ---- 18
CV/CVS 20,50Hz ---- 19
CV/CVS 32,50Hz ---- 20
CV/CVS 42,50Hz ---- 21
CV/CVS 65,50Hz ---- 22
CV/CVS 85,50Hz ---- 23
CV/CVS 120,50Hz ---- 24
CV/CVS 150,50Hz ---- 25
CV/CVS 200,50Hz ---- 26
CV/CVS 1,60Hz ---- 27
CV/CVS 2,60Hz ---- 28
CV/CVS 3,60Hz ---- 29
CV/CVS 4,60Hz ---- 30
CV/CVS 8,60Hz ---- 31
CV/CVS 12,60Hz ---- 32
CV/CVS 16,60Hz ---- 33
CV/CVS 20,60Hz ---- 34
CV/CVS 32,60Hz ---- 35
CV/CVS 42,60Hz ---- 36
CV/CVS 65,60Hz ---- 37
CV/CVS 85,60Hz ---- 38
CV/CVS 120,60Hz ---- 39
CV/CVS 150,60Hz ---- 40
CV/CVS 200,60Hz ---- 41

Performance scope

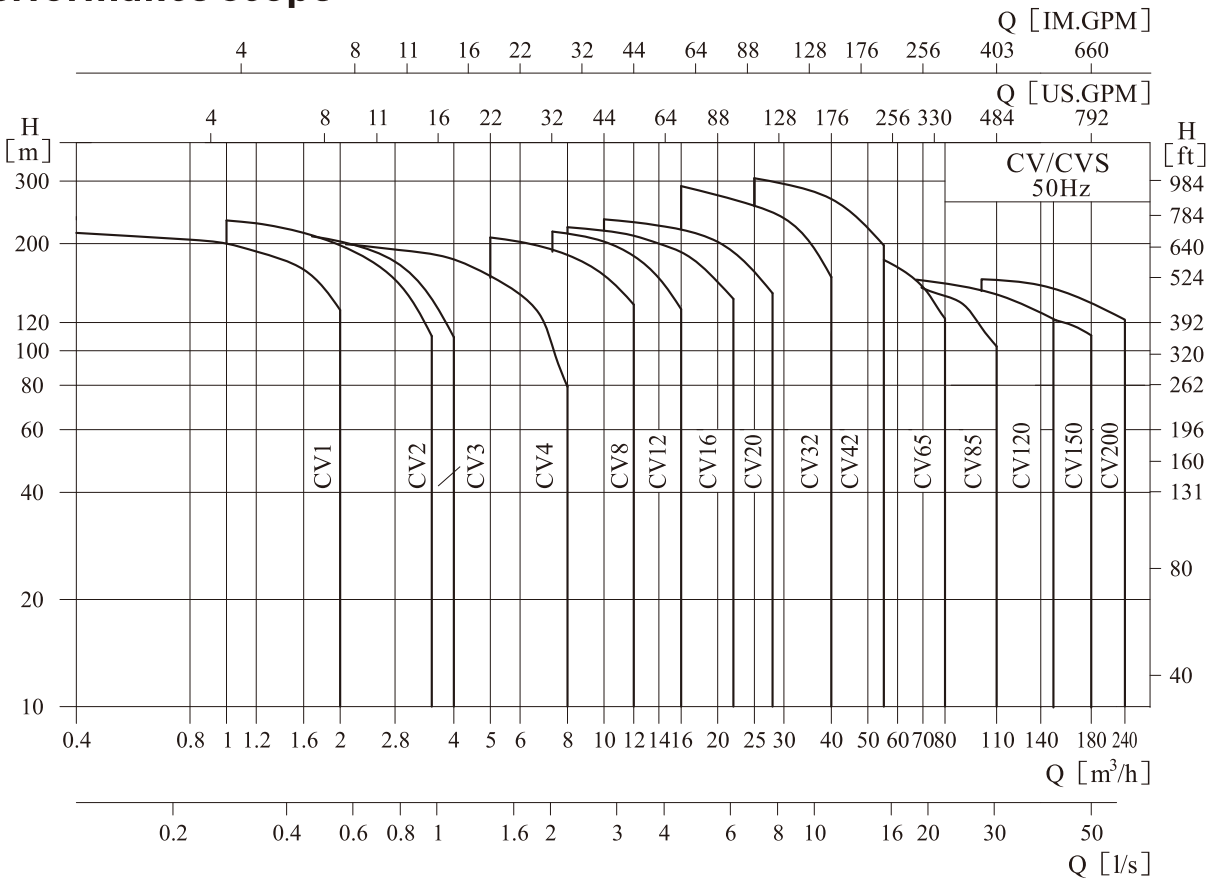

Product range

Description	CV1	CV2	CV3	CV4	CV8	CV12	CV16	CV20	CV32	CV42	CV65	CV85	CV120	CV150	CV200
Rated flow [m^3/h]	1	2	3	4	8	12	16	20	32	42	65	85	120	150	200
Rated flow [l/s]	0.28	0.56	0.83	1.1	2.2	3.3	4.4	5.6	8.9	11.7	18	24	33	41.6	55.6
Flow range [m^3/h]	0.4-2	1-3.5	1.2-4	1.5-7	5-12	7-16	8-22	10-28	16-40	25-55	30-80	50-110	60-150	80-180	100-240
Flow range [l/s]	0.11-0.56	0.28-0.97	0.33-1.1	0.42-1.9	1.4-3.3	1.9-4.4	2.2-6.1	2.8-7.8	4.4-11.1	6.9-15.3	8.3-22.2	13.8-30.5	16.7-41.7	22-50	27.8-66.7
Max.pressure [bar]	21	23	22	21	21	22	22	23	29	30	22	17	16	16	16
Motor power [kW]	0.37-2.2	0.37-3	0.37-3	0.37-4	0.75-7.5	1.5-11	2.2-15	1.1-18.5	1.5-30	3.0-45	4.0-45	5.5-45	11-75	11-75	18.5-110
Temperature range [℃]	−15～+120														
Max.efficiency [%]	44	46	54	57	62	63	66	69	73	75	76	77	74	73	79
Type															
CV	●	●	●	●	●	●	●	●	●	●	●	●	●	●	●
CVS	●	●	●	●	●	●	●	●	●	●	●	●	●	●	●
CV Pipe connection															
DIN Flange	DN25	DN25	DN25	DN32	DN40	DN50	DN50	DN50	DN65	DN80	DN100	DN100	DN125	DN125	DN150
Oval Flange	G1	G1	G1	G1 1/4	G1 1/2										
CVS Pipe connection															
DIN Flange	DN25	DN25	DN25	DN32	DN40	DN50	DN50	DN50	DN65	DN80	DN100	DN100	DN125	DN125	DN150
Cutting ferrule joint	DN32	DN32	DN32	DN32	DN50	DN50	DN50	DN50							
Pipe thread	ZG1 1/4	ZG1 1/4	ZG1 1/4	ZG1 1/4	ZG2	ZG2	ZG2	ZG2							
Oval Flange	G1	G1	G1	G1 1/4	G1 1/2										

Performance scope

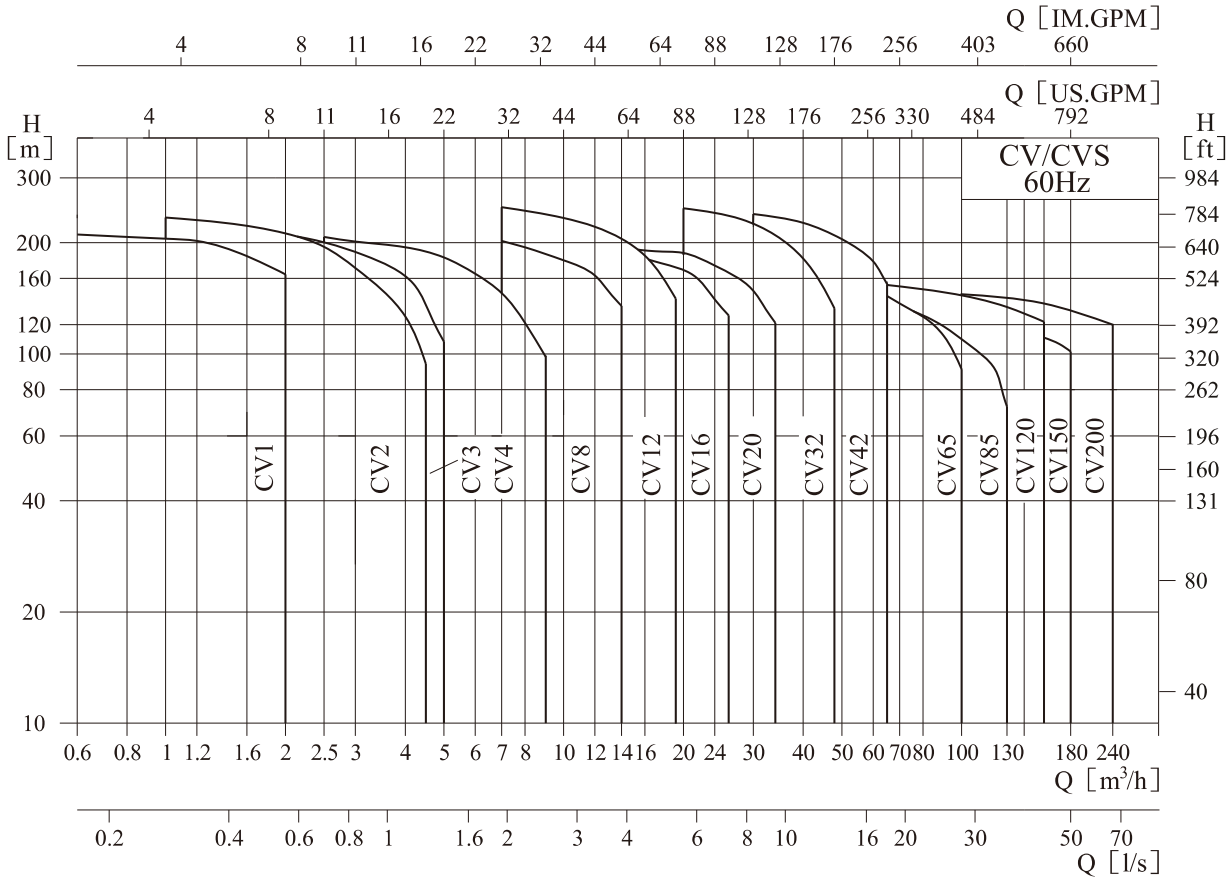

Product range

Description	CV1	CV2	CV3	CV4	CV8	CV12	CV16	CV20	CV32	CV42	CV65	CV85	CV120	CV150	CV200
Rated flow [m^3/h]	1	2	3	4	8	12	16	20	32	42	65	85	120	150	200
Rated flow [l/s]	0.28	0.56	0.83	1.1	2.2	3.3	4.4	5.6	8.9	11.7	18	24	33	41.6	55.6
Flow range [m^3/h]	0.6-2	1-4.5	1.5-5	2.5-8	7-14	7-19	10-26	12-34	20-48	30-65	40-100	60-130	60-160	80-180	100-240
Flow range [l/s]	0.17-0.56	0.28-1.25	0.42-1.4	0.7-2.2	1.9-3.9	1.9-5.3	2.8-7.2	3.3-9.4	5.5-13.3	8.3-18	11.1-27.7	16.7-36.1	16.7-44.4	22-50	27.8-66.7
Max.pressure [bar]	22	23.5	23	21	20	25	20	20	25	26	18	15	15	14	15
Motor power [kW]	0.37-3	0.55-4	0.37-4	0.75-5.5	0.75-11	1.1-15	2.2-18.5	2.2-18.5	3-30	5.5-45	7.5-45	11-45	18.5-75	15-75	30-110
Temperature range [℃]	−15～+120														
Max.efficiency [%]	44	46	54	57	62	63	66	69	73	75	76	77	74	73	78
Type															
CV	●	●	●	●	●	●	●	●	●	●	●	●	●	●	●
CVS	●	●	●	●	●	●	●	●	●	●	●	●	●	●	●
CV Pipe connection															
DIN Flange	DN25	DN25	DN25	DN32	DN40	DN50	DN50	DN50	DN65	DN80	DN100	DN100	DN125	DN125	DN150
Oval Flange	G1	G1	G1	G1 1/4	G1 1/2										
CVS Pipe connection															
DIN Flange	DN25	DN25	DN25	DN32	DN40	DN50	DN50	DN50	DN65	DN80	DN100	DN100	DN125	DN125	DN150
Cutting ferrule joint	●	●	●	●	●	●	●	●							
Pipe thread	●	●	●	●	●	●	●	●							

Pump

CV / CVS is a kind of vertical non-self priming multistage centrifugal pump, which is driven by a standard electric motor. The motor output shaft directly connects with the pump shaft through a coupling. The pressure-resistant cylinder and flow passage components are fixed between pump head and inlet & outlet section with stay bolts. The inlet and outlet are located at the pump bottom at the same plane. This kind of pump can be equipped with an intelligent protector to effectively prevent it from dry-running, out-of-phase and overload.

Motor

- Full-enclosed air-blast two-pole standard motor
- Protection class: IP55
- Insulation class: F
- Standard voltage:50Hz: 1 × 220-230 / 240V
  3 × 200-220 / 346-380V
  3 × 220-240 / 380-415V
  3 × 380-415V

Application

CV / CVS is a kind of multifunctional products. It can be used to convey various medium from tap water to industrial liquid at different temperature and with different flow rate and pressure. CV type is applicable to conveying non-corrosive liquid, while CVS is suitable for slightly corrosive liquid.

- Water supply: Water filter and transport in Waterworks, boosting of main pipeline, boosting in high-rise buildings.
- Industrial boosting: Process flow water system, cleaning system, high-pressure washing system, fire fighting system.
- Industrial liquid conveying: Cooling and air-conditioning system, boiler water supply and condensing system, machine-associated purpose, acids and alkali.
- Water treatment: Ultrafiltration system, reverse osmosis system, distillation system, separator, swimming pool.
- Irrigation: Farmland irrigation, spray irrigation, dripping irrigation.

Operation conditions

- Thin, clean, non-flammable and non-explosive liquid containing no solid granules and fibers.
- Liquid temperature:
  Normal temperature type: -15℃～+70℃,
  Hot water type: -15℃～+120℃
- Ambient temperature: up to +40℃
- Altitude:up to 1000m

Definition of Model

CV/CVS 1,2,3,4,8,12,16 and 20

CV S 8 — 2 / 1

- 1 — Number of impeller
- 2 — Stage
- 8 — Rated flow (m^3/h)
- S — (Common type omitted) Flow passage components are of stainless steel 304 or 316L
- CV — Light vertical multistage centrifugal pump

CV/CVS 32,42,65,85,120 and 150

CV S 32 — 30 — 2

- 2 — Number of small impeller
- 30 — Stage × 10
- 32 — Rated flow (m^3/h)
- S — (Common type omitted) Flow passage components are of stainless steel 304 or 316L
- CV — Light vertical multistage centrifugal pump

CV/CVS 200

CV S 200 — 30 — 2A — B

- B: One small impeller B
- 2A: Two small impellers A
- 30: Stage×10
- 200: Rated flow (m^3/h)
- S: (Common type omitted) Flow passage components are of stainless steel 304 or 316L
- CV: Light vertical multistage centrifugal pump

Max. Working pressure

Model	Curve number
CV 1,2,3,4 Flange	2
CV 1,2,3,4 Oval Flange	1
CVS 1,2,3,4	2
CV 8,12,16,20 Flange	3
CV 8 Oval Flange	1
CVS 8,12,16,20	3
CV, CVS32	
32-10-1～32-70 32-80-2～32-120 32-130～32-160	1（*） 4（*） 5
CV, CVS42	
42-10-1～42-60 42-70-2～42-90 42-100-2～42-130-2	1（*） 4（*） 5
CV, CVS65	
65-10-1～65-50 65-60-2～65-80-1	1（**） 4
CV, CVS85	
85-10-1～85-50-2 85-50～85-60	1（**） 4
CV, CVS120,150,200	6

*: For curve 5, need to specify especially;
**: For curve 4, need to specify especially.

The following figure shows the limitation of pressure and temperature, which shall be in the scope as shown in the figure.

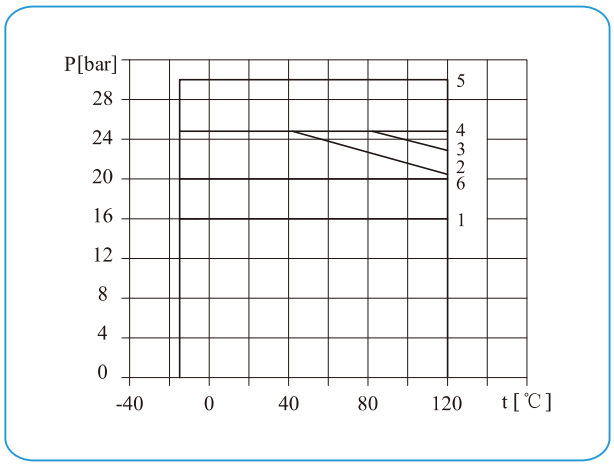

Max. Ambient temperature

When the pump operates under ambient temperature higher than 40℃ or under altitude higher than 1000m, because of low air density and poor cooling effects, the motor output power P2 will be decreased to certain extent. If the pump is operated under the above-said conditions, it should be equipped with motor of higher power.

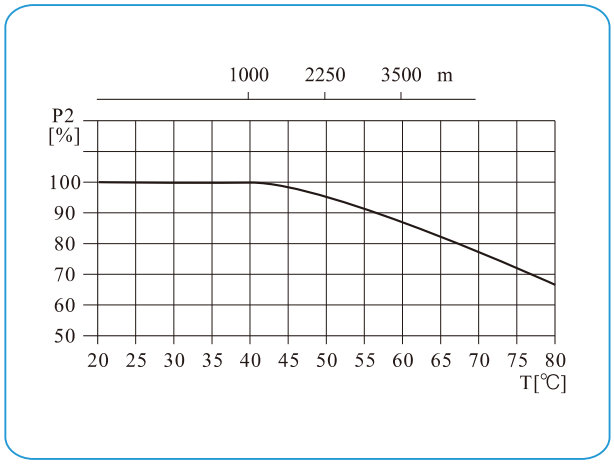

Curve illustration

Stage
First number:
Stage×10
Second number:
Number of small impeller

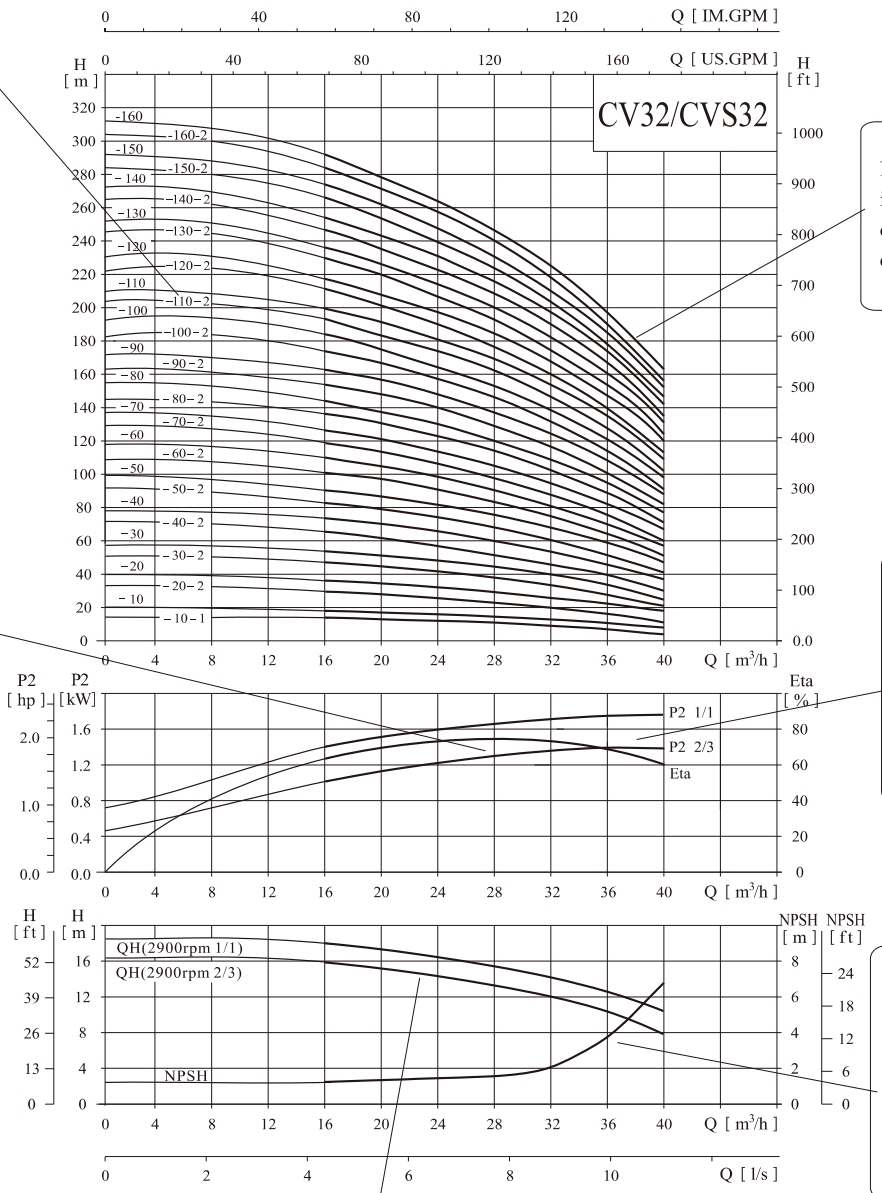

Pump Q-H curve, the thickened line presents recommended performance region

The power curve presents the input power of each stage, which is divided into integrate impeller type(1/1) and the type with small impeller (2/3)

Eta curve presents efficiency of the pump, For the pump equipped with small impeller, its efficiency will be 2% lower than that shown by the curve.

NPSH curve expresses the average value of all curves of this series. A safety margin of 0.5m shall be taken into consideration when making selection.

The Q-H curve of each stage, presenting integrate impeller type(1/1) and the type equipped with small impeller(2/3).

Performance curve

Following conditions are suitable for the performance curves shown bellow:

1、All curves are based on the measured values of 50Hz: constant motor speed 2900rpm or 2950rpm.

2、Curve tolerance in conformity with ISO9906 Annex A.

3、Measurement is done with 20℃ air-free water, kinematic viscosity of 1mm^2/sec.

4、The operation of pump shall refer to the performance region indicated by the thickened curve to prevent overheating due to too small flow rate or overload of motor due to too large flow rate.

Minimum inlet pressure NPSH

In case that the pressure in pump is lower than the steam pressure used to convey liquid, the cavitations will occur. To avoid cavitations, a minimum pressure at the inlet side of the pump shall be guaranteed. The maximum suction stroke can be calculated with following formula:

H=Pb×10.2-NPSH-Hf-Hv-Hs

Pb=atmosphere pressure [bar]

(can be set as 1bar)

In a closed system, Pb means system pressure [bar]

NPSH=Net positive suction head [m]

(It can be read out from the point of possible max. flow rate shown on NPSH curve)

Hf=Pipeline loss at the inlet [m]

Hv=Steam pressure [m]

Hs=Safety margin=Minimum 0.5m delivery head

If the calculated result H is positive, the pump may run under the max. Suction stroke H.

In case the calculated result H is negative, a delivery head of min. Inlet pressure is necessary.

Operation in parallel

Connecting several pumps in parallel running will be efit much more than running a single large pump.

- Applicable to different working states necessary in a variable flow system.
- Increasing the possibility of water supply when the pump is in failure. Because in case of pump failure, only part of the system flow is effected.

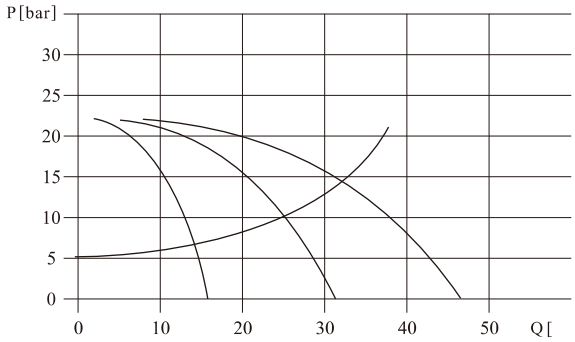

Two pumps or more can be connected in parallel running if necessary.

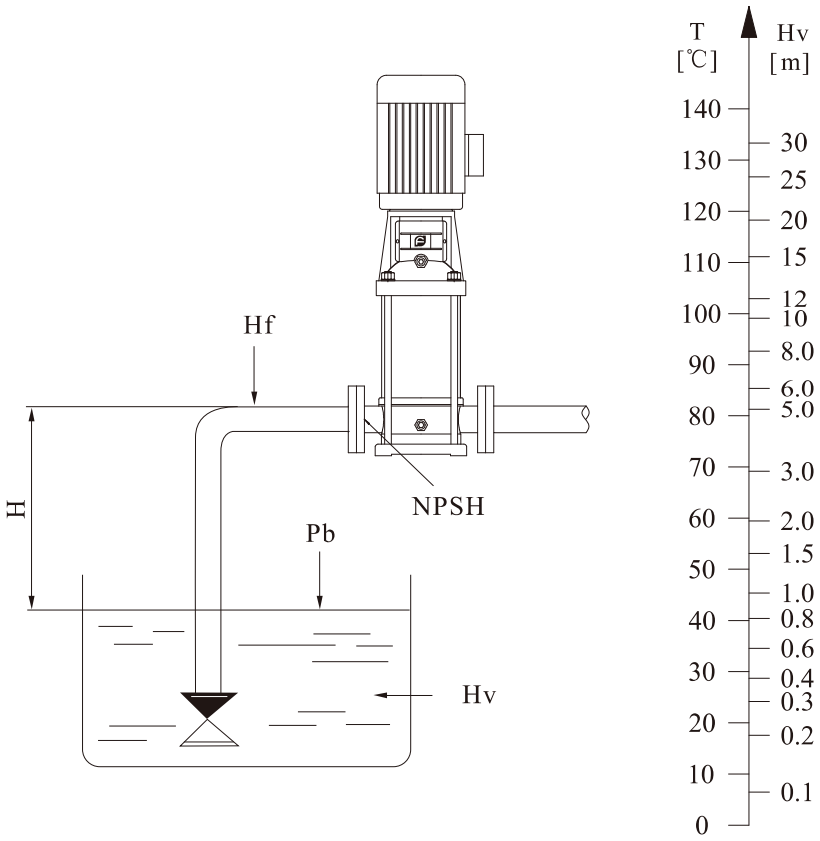

Check and ensure that the pump is not at cavitations state.

Section drawing CV/CVS1,2,3,4

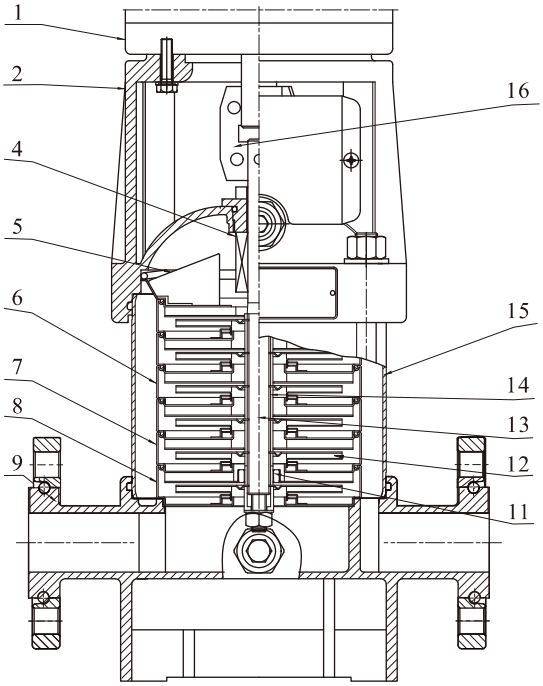

CV

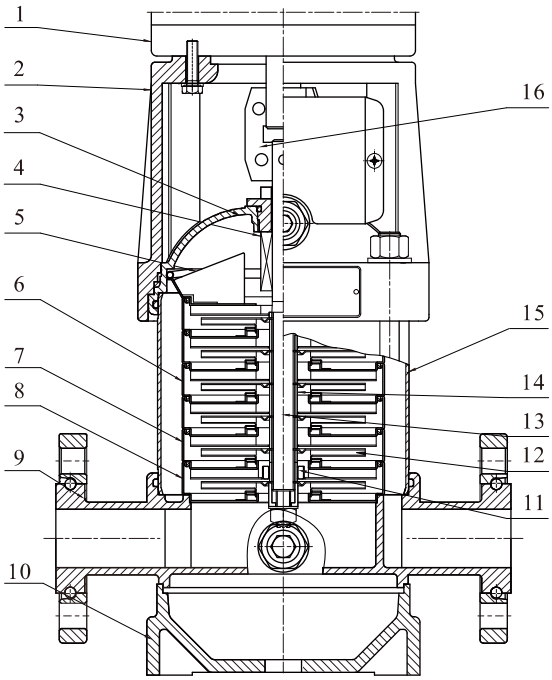

CVS

Material CV/CVS1,2,3,4

NO.	Name	Material	AISI/ASTM
1	Motor		
2	Pump head	Cast iron	ASTM25B
4	Mechanical seal		
5	Top diffuser	Stainless steel	AISI304
6	Diffuser	Stainless steel	AISI304
7	Support diffuser	Stainless steel	AISI304
8	Inducer	Stainless steel	AISI304
11	Bearing	Tungsten carbide	
12	Impeller	Stainless steel	AISI304
13	Shaft	Stainless steel	AISI304 AISI316L

NO.	Name	Material	AISI/ASTM
14	Impeller sleeve	Stainless steel	AISI304
15	Cylinder	Stainless steel	AISI304
16	Coupling	Carbon steel	
CVS			
3	Seal base	Stainless steel	AISI304
9	Inlet and outlet chamber	Stainless steel	AISI304
10	Base plate	Cast iron	ASTM25B
CV			
9	Inlet and outlet chamber	Cast iron	ASTM25B

Section drawing CV/CVS8,12,16,20

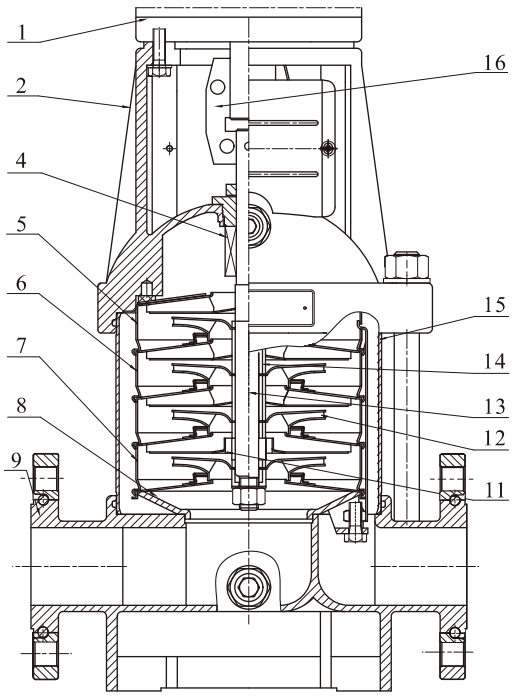

CV

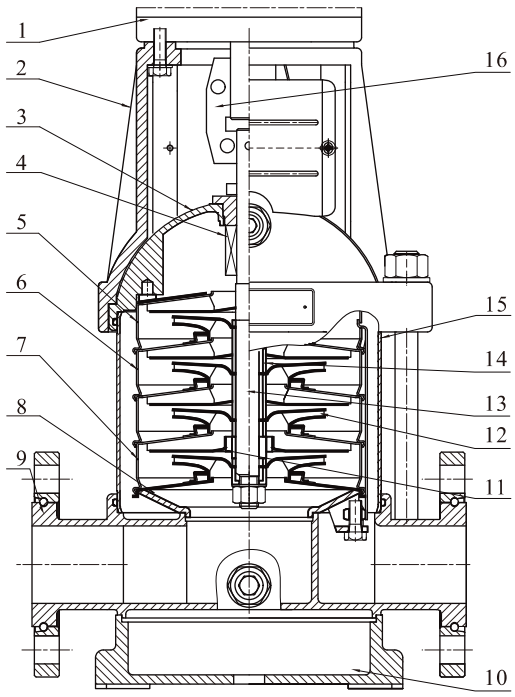

CVS

Material CV/CVS8,12,16,20

NO.	Name	Material	AISI/ASTM
1	Motor		
2	Pump head	Cast iron	ASTM25B
4	Mechanical seal		
5	Top diffuser	Stainless steel	AISI304
6	Diffuser	Stainless steel	AISI304
7	Support diffuser	Stainless steel	AISI304
8	Inducer	Stainless steel	AISI304
11	Bearing	Tungsten carbide	
12	Impeller	Stainless steel	AISI304
13	Shaft	Stainless steel	AISI304 AISI316L

NO.	Name	Material	AISI/ASTM
14	Impeller sleeve	Stainless steel	AISI304
15	Cylinder	Stainless steel	AISI304
16	Coupling	Carbon steel	
CVS			
3	Seal base	Stainless steel	AISI304
9	Inlet and outlet chamber	Stainless steel	AISI304
10	Base plate	Cast iron	ASTM25B
CV			
9	Inlet and outlet chamber	Cast iron	ASTM25B

Section drawing CV/CVS32,42,65,85

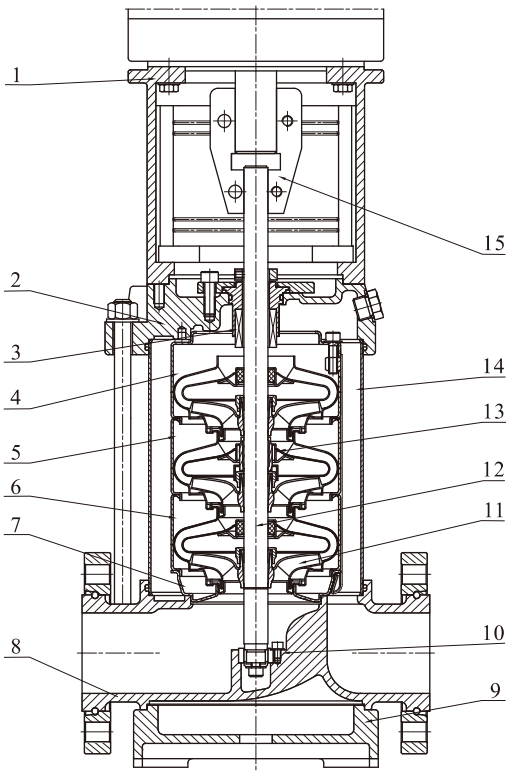

Material CV/CVS32,42,65,85

NO.	Name	Material	AISI/ASTM
1	Bracket	Cast iron	ASTM25B
3	Mechanical seal		
4	Top diffuser	Stainless steel	AISI304
5	Support diffuser	Stainless steel	AISI304
6	Diffuser	Stainless steel	AISI304
7	Inducer	Stainless steel	AISI304
9	Base plate	Cast iron	ASTM25B
10	Bottom bearing	Tungsten carbide	
11	Impeller	Stainless steel	AISI304

NO.	Name	Material	AISI/ASTM
12	Shaft	Stainless steel	AISI316L AISI304 AISI431
13	Intermediate bearing	Tungsten carbide	
14	Cylinder	Stainless steel	AISI304
15	Coupling	Carbon steel	
	Rubber parts	NBR	
CV			
2	Pump head	Cast iron	ASTM25B
8	Inlet and outlet chamber	Cast iron	ASTM25B
CVS			
2	Pump head	Stainless steel	AISI304
8	Inlet and outlet chamber	Stainless steel	AISI304

Section drawing CV/CVS120,150,200

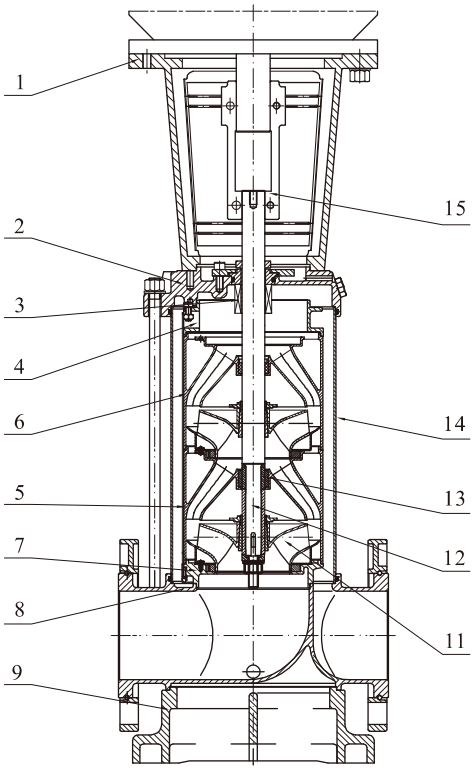

Material CV/CVS120,150,200

NO.	Name	Material	AISI/ASTM
1	Bracket	Cast iron	ASTM25B
3	Mechanical seal		
4	Discharge	Stainless steel	AISI304
5	Support diffuser	Stainless steel	AISI304
6	Diffuser	Stainless steel	AISI304
7	Inducer	Stainless steel	AISI304
9	Base plate	Cast iron	ASTM 80-55-06
11	Impeller	Stainless steel	AISI304
12	Shaft	Stainless steel	AISI304

NO.	Name	Material	AISI/ASTM
13	Bearing	Tungsten carbide	
14	Cylinder	Stainless steel	AISI304
15	Coupling	Carbon steel	
	Rubber parts	NBR	
CV			
2	Pump head	Cast iron	ASTM 80-55-06
8	Inlet and outlet chamber	Cast iron	ASTM 80-55-06
CVS			
2	Pump head	Stainless steel	AISI304
8	Inlet and outlet chamber	Stainless steel	AISI304

Performance curve

ISO9906 Annex A 2900rpm

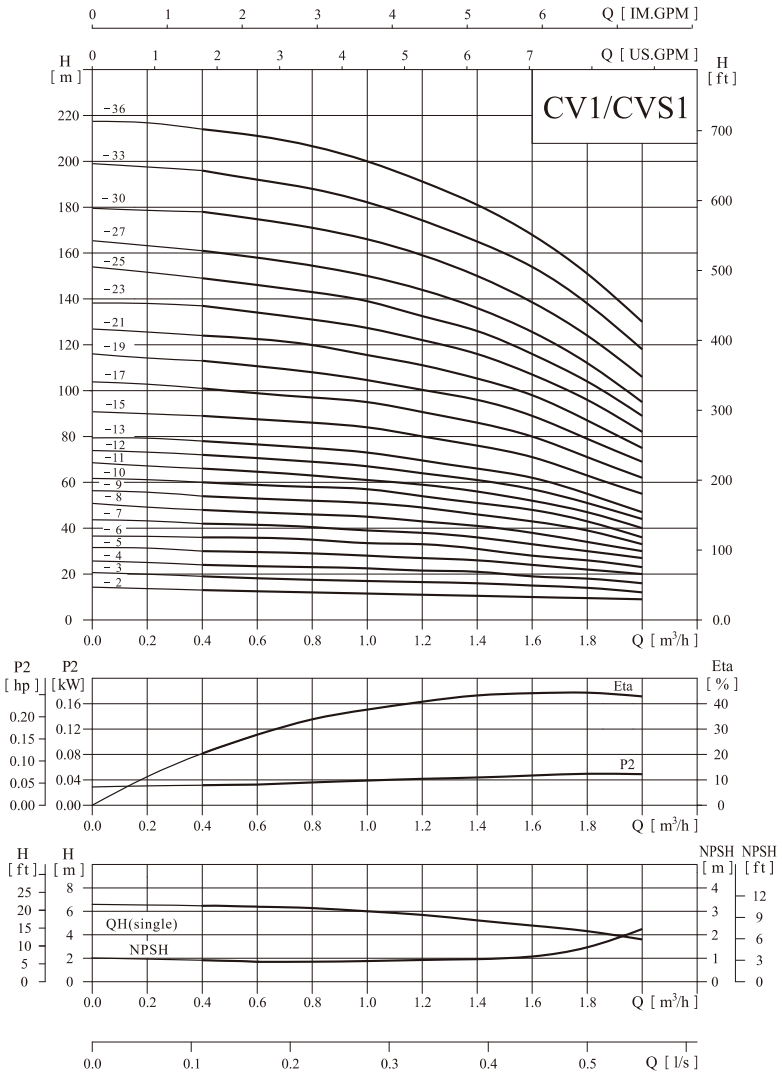

Installation sketch

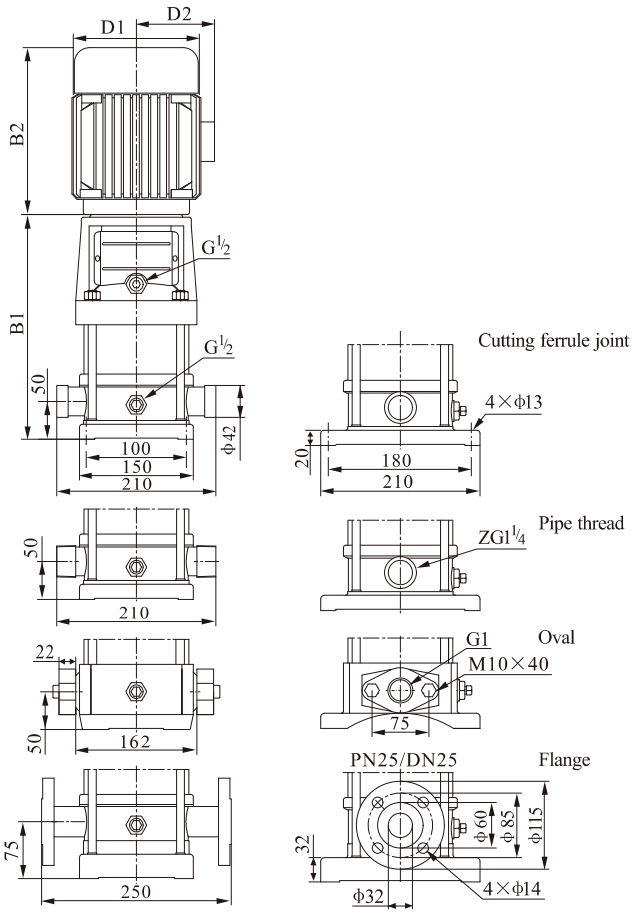

CVS 1-25 ~ 1-36 sub-connection of pipeline has no oval flange connection. The overall dimensions of the single-phase motor and explosion-proof motor are a little different. Pls contact us for details.

Performance table

Model	Driving motor (kW)	Driving motor (hp)	Q (m³/h)	0.4	0.6	0.8	1.0	1.2	1.4	1.6	1.8	2.0
CVS 1-2	0.37	0.5	H (m)	13	12.5	12	11.5	11	10.5	10	9.5	9
CVS 1-3	0.37	0.5		19	18	17.5	17	16.5	16	15	14	12
CVS 1-4	0.37	0.5		24	23.5	23	22.5	21.5	21	19	18	16
CVS 1-5	0.37	0.5		30	29.6	29	28	27	26	24	22	20
CVS 1-6	0.37	0.5		36	35.5	35	33.5	33	31	28	26	23
CVS 1-7	0.37	0.5		42	41	40.5	39	38	36	33	30	27
CVS 1-8	0.55	0.75		48	47	46	45	43	41	38	34	30
CVS 1-9	0.55	0.75		54	53	52	51	49	46	43	39	33
CVS 1-10	0.55	0.75		60	59	58	57	54	51	48	43	36
CVS 1-11	0.55	0.75		66	65	63	61	59	56	52	47	40
CVS 1-12	0.75	1		72	71	69	67	64	61	57	51	44
CVS 1-13	0.75	1		78	77	75	73	69	66	62	55	47
CVS 1-15	0.75	1		89	88	86	84	79	76	71	63	55
CVS 1-17	1.1	1.5		101	99	97	95	89	86	80	71	62
CVS 1-19	1.1	1.5		113	110	108	106	99	96	89	79	69
CVS 1-21	1.1	1.5		124	122	120	117	110	106	98	87	75
CVS 1-23	1.1	1.5		137	133	131	128	121	116	107	96	82
CVS 1-25	1.5	2		149	145	143	139	131	126	116	104	89
CVS 1-27	1.5	2		161	157	155	150	141	136	125	112	95
CVS 1-30	1.5	2		178	175	171	166	157	150	139	124	106
CVS 1-33	2.2	3		196	192	188	183	173	165	154	137	118
CVS 1-36	2.2	3		214	210	205	200	190	181	169	151	130

Size and weight

Model	Size (mm) B1	B2	B1+B2	D1	D2	Weight (kg)
CVS 1-2	258	210	468	148	117	20
CVS 1-3	276	210	486	148	117	20
CVS 1-4	294	210	504	148	117	21
CVS 1-5	312	210	522	148	117	21
CVS 1-6	330	210	540	148	117	22
CVS 1-7	348	210	558	148	117	23
CVS 1-8	366	210	576	148	117	24
CVS 1-9	384	210	594	148	117	25
CVS 1-10	402	210	612	148	117	26
CVS 1-11	420	210	630	148	117	26
CVS 1-12	448	245	693	170	142	29
CVS 1-13	466	245	711	170	142	30
CVS 1-15	502	245	747	170	142	31
CVS 1-17	538	245	783	170	142	33
CVS 1-19	574	245	819	170	142	34
CVS 1-21	610	245	855	170	142	35
CVS 1-23	646	245	891	170	142	36
CVS 1-25	692	290	982	190	155	42
CVS 1-27	728	290	1018	190	155	43
CVS 1-30	782	290	1072	190	155	45
CVS 1-33	836	290	1126	190	155	49
CVS 1-36	890	290	1180	190	155	51

Performance curve

ISO9906 Annex A 2900rpm

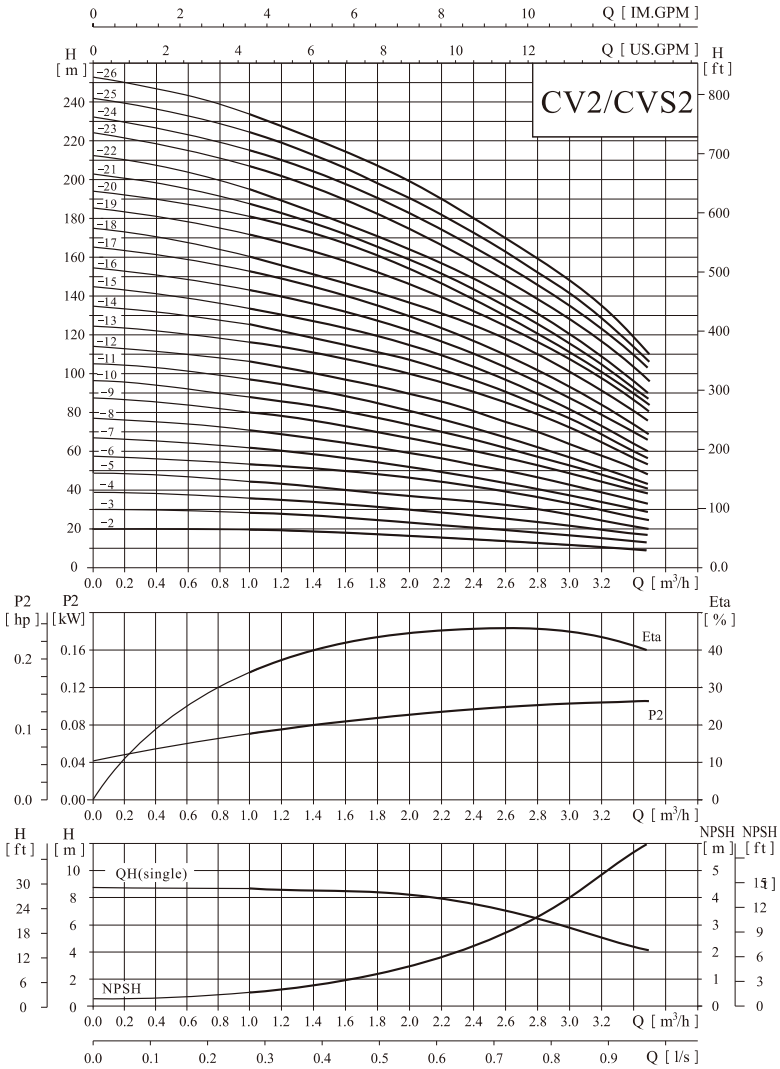

Installation sketch

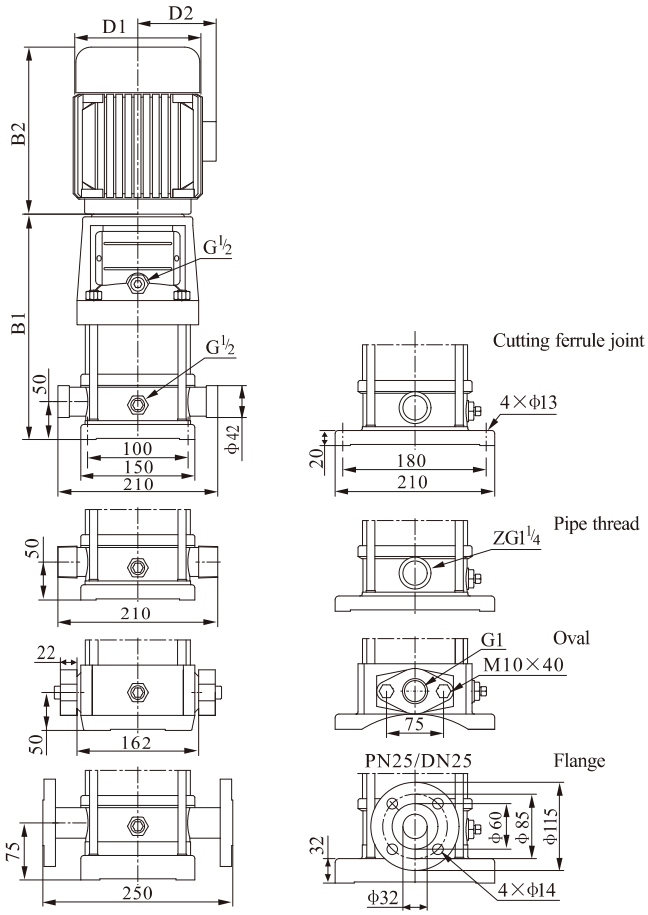

CVS2-18 ~ 2-26 sub-connection of pipeline has no oval flange connection. The overall dimensions of the single-phase motor and explosion-proof motor are a little different. Pls contact us for details.

Performance table

Model	Driving motor (kW)	Driving motor (hp)	Q (m³/h)	1	1.2	1.6	2.0	2.4	2.8	3.2	3.5
CVS 2-2	0.37	0.5	H (m)	18	17	16	15	13	12	10	8
CVS 2-3	0.37	0.5		27	26	24	22	20	18	15	12
CVS 2-4	0.55	0.75		36	35	33	30	26	24	20	16
CVS 2-5	0.55	0.75		45	43	40	37	33	30	24	20
CVS 2-6	0.75	1		53	52	50	45	40	36	30	24
CVS 2-7	0.75	1		63	61	57	52	47	41	35	28
CVS 2-9	1.1	1.5		80	78	73	67	61	54	45	37
CVS 2-11	1.1	1.5		98	95	89	82	73	64	54	44
CVS 2-13	1.5	2		116	114	106	98	89	78	65	52
CVS 2-15	1.5	2		134	130	123	112	100	90	73	60
CVS 2-18	2.2	3		161	157	148	136	121	108	91	76
CVS 2-22	2.2	3		197	192	180	165	148	130	110	90
CVS 2-26	3.0	4		232	228	214	198	179	158	130	110

Size and weight

Model	Size (mm) B1	B2	B1+B2	D1	D2	Weight (kg)
CVS 2-2	258	210	468	148	117	20
CVS 2-3	276	210	486	148	117	20
CVS 2-4	294	210	504	148	117	22
CVS 2-5	312	210	522	148	117	23
CVS 2-6	340	245	585	170	142	26
CVS 2-7	358	245	603	170	142	26
CVS 2-9	394	245	639	170	142	28
CVS 2-11	430	245	675	170	142	29
CVS 2-13	476	290	766	190	155	35
CVS 2-15	512	290	802	190	155	36
CVS 2-18	566	290	856	190	155	41
CVS 2-22	638	290	928	190	155	42
CVS 2-26	720	315	1035	197	165	52

Performance curve

ISO9906 Annex A 2900rpm

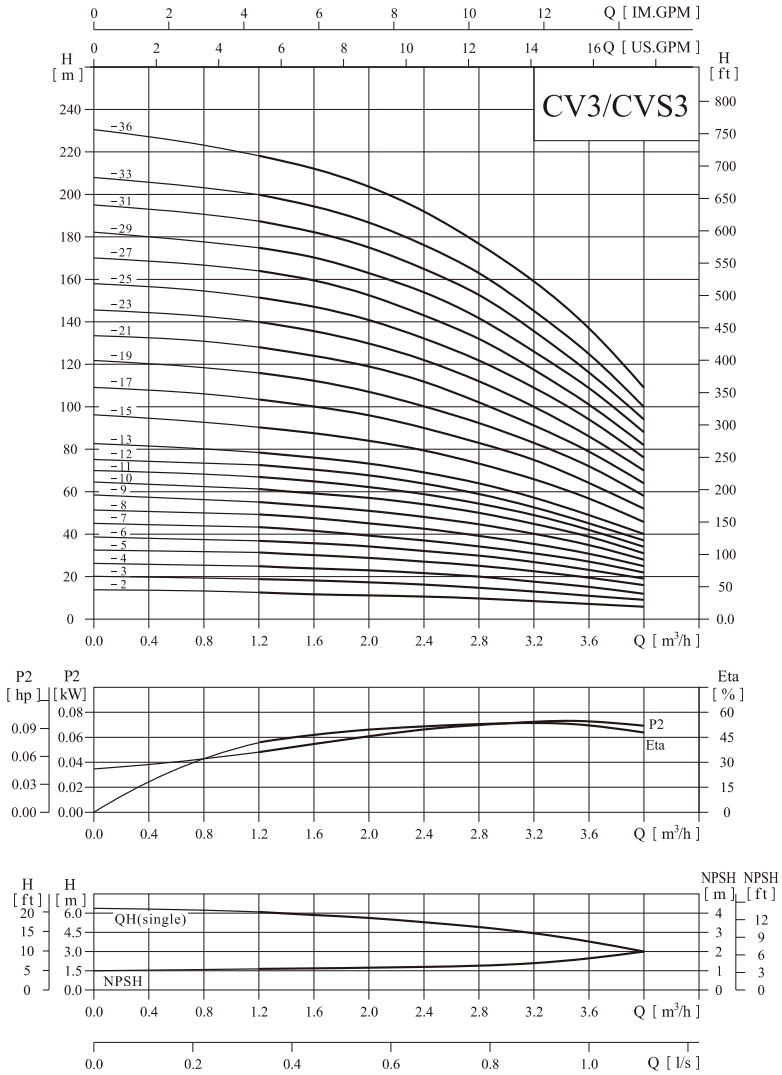

Installation sketch

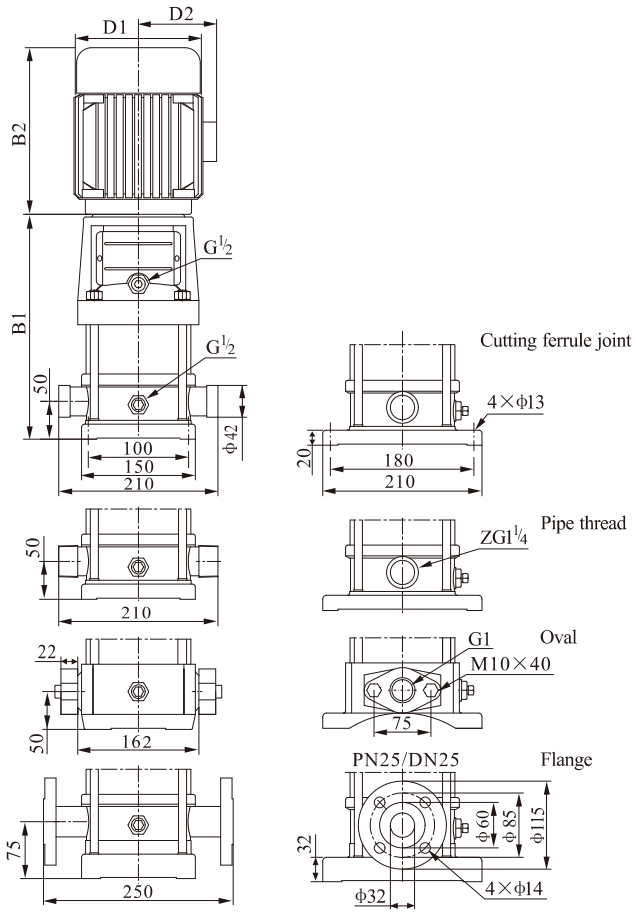

CVS 3-25 ~ 3-36 sub-connection of pipeline has no oval flange connection. The overall dimensions of the single-phase motor and explosion-proof motor are a little different. Pls contact us for details.

Performance table

Model	Driving motor (kW)	Driving motor (hp)	Q (m³/h)	1.2	1.6	2.0	2.4	2.8	3.0	3.2	3.6	4.0
CVS 3-2	0.37	0.5	H (m)	12.5	11.5	11	10.5	10	9	8	7	6
CVS 3-3	0.37	0.5		19	18.5	17.5	16.5	15	14	13	11	9
CVS 3-4	0.37	0.5		25	24	23	21.5	20	19	18	15	12
CVS 3-5	0.37	0.5		31	30	29	27	25	23	22	19	16
CVS 3-6	0.55	0.75		36	35	34	32	30	28	27	23	19
CVS 3-7	0.55	0.75		43	41	39	37	34	32	31	27	22
CVS 3-8	0.75	1		49	47	45	43	39	37	35	31	25
CVS 3-9	0.75	1		55	53	51	48	45	42	40	35	28
CVS 3-10	0.75	1		61	59	57	54	50	47	45	39	31
CVS 3-11	1.1	1.5		67	64	61	58	54	51	49	42	34
CVS 3-12	1.1	1.5		73	70	67	63	58	55	52	45	37
CVS 3-13	1.1	1.5		78	76	73	69	64	60	57	49	40
CVS 3-15	1.1	1.5		90	88	84	79	73	69	66	57	46
CVS 3-17	1.5	2		103	100	96	90	83	79	75	64	52
CVS 3-19	1.5	2		115	112	107	100	92	88	83	72	58
CVS 3-21	2.2	3		128	124	119	112	102	98	91	79	64
CVS 3-23	2.2	3		140	135	130	122	112	107	100	86	70
CVS 3-25	2.2	3		151	147	141	131	122	116	109	94	76
CVS 3-27	2.2	3		164	159	152	143	132	124	117	101	82
CVS 3-29	2.2	3		175	170	163	153	142	133	126	109	88
CVS 3-31	3.0	4		187	182	175	165	153	142	135	116	94
CVS 3-33	3.0	4		199	194	187	176	163	151	145	125	100
CVS 3-36	3.0	4		218	212	204	192	178	168	159	137	109

Size and weight

Model	Size (mm) B1	B2	B1+B2	D1	D2	Weight (kg)
CVS 3-2	258	210	468	148	117	20
CVS 3-3	276	210	486	148	117	20
CVS 3-4	294	210	504	148	117	21
CVS 3-5	312	210	522	148	117	21
CVS 3-6	330	210	540	148	117	23
CVS 3-7	348	210	558	148	117	24
CVS 3-8	376	245	621	170	142	27
CVS 3-9	394	245	639	170	142	28
CVS 3-10	412	245	657	170	142	28
CVS 3-11	430	245	675	170	142	29
CVS 3-12	448	245	693	170	142	30
CVS 3-13	466	245	711	170	142	31
CVS 3-15	502	245	747	170	142	32
CVS 3-17	548	290	838	190	155	38
CVS 3-19	584	290	874	190	155	39
CVS 3-21	620	290	910	190	155	42
CVS 3-23	656	290	946	190	155	43
CVS 3-25	692	290	982	190	155	44
CVS 3-27	728	290	1018	190	155	45
CVS 3-29	764	290	1054	190	155	46
CVS 3-31	810	315	1125	197	165	54
CVS 3-33	846	315	1161	197	165	55
CVS 3-36	900	315	1215	197	165	57

Performance curve

ISO9906 Annex A 2900rpm

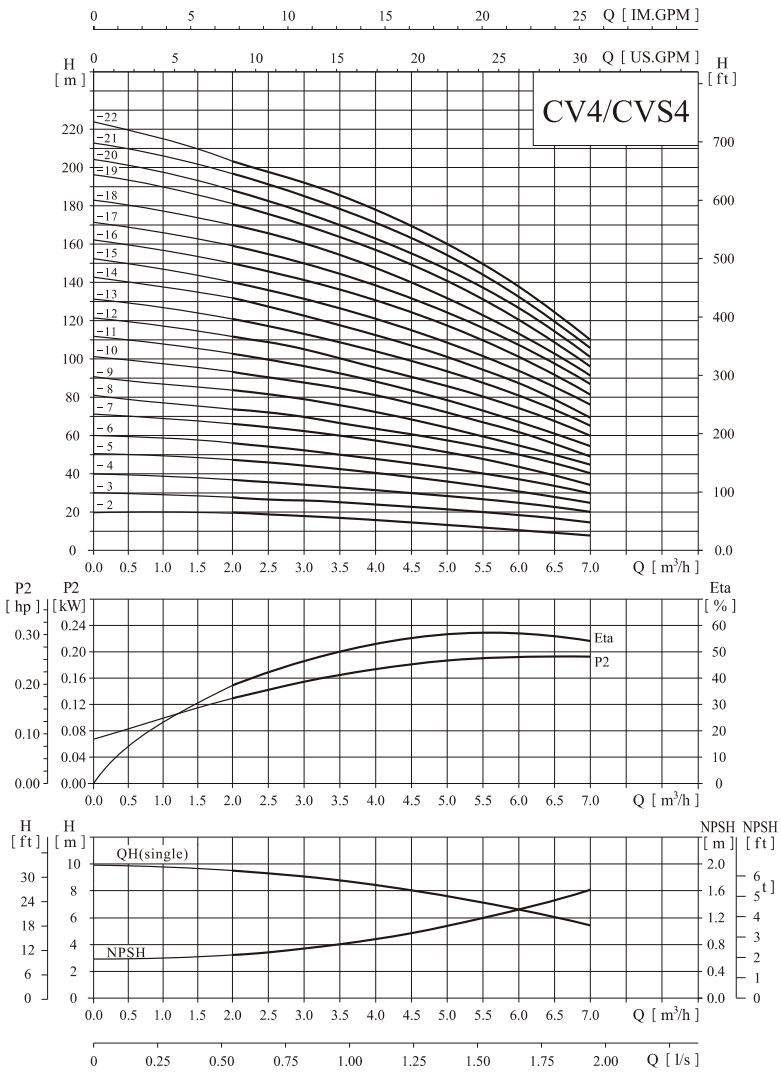

Installation sketch

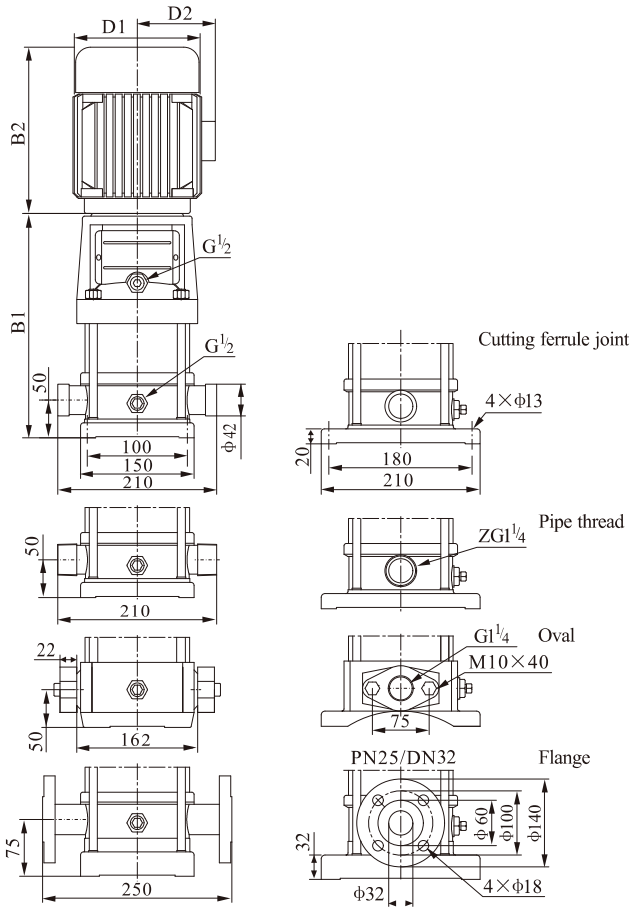

CVS 4-19 ~ 4-22 sub-connection of pipeline has no oval flange connection. The overall dimensions of the single-phase motor and explosion-proof motor are a little different. Pls contact us for details.

Performance table

Model	Driving motor (kW)	Driving motor (hp)	Q (m³/h)	1.5	2.0	3.0	4.0	5.0	6.0	7.0
CVS 4-2	0.37	0.5	H (m)	19	18	17	15	13	10	8
CVS 4-3	0.55	0.75		28	27	26	24	20	18	13
CVS 4-4	0.75	1		38	36	34	32	27	24	19
CVS 4-5	1.1	1.5		47	45	43	40	34	31	23
CVS 4-6	1.1	1.5		56	54	52	48	41	37	28
CVS 4-7	1.5	2		66	63	61	56	48	43	33
CVS 4-8	1.5	2		74	72	70	64	55	50	38
CVS 4-10	2.2	3		96	90	87	81	71	62	48
CVS 4-12	2.2	3		114	108	104	95	85	75	58
CVS 4-14	3.0	4		136	126	122	112	101	89	68
CVS 4-16	3.0	4		152	144	140	129	115	101	78
CVS 4-19	4.0	5.5		183	171	168	153	137	122	93
CVS 4-22	4.0	5.5		211	200	192	178	160	138	108

Size and weight

Model	Size (mm) B1	B2	B1+B2	D1	D2	Weight (kg)
CVS 4-2	276	210	486	148	117	21
CVS 4-3	303	210	513	148	117	22
CVS 4-4	340	245	585	170	142	25
CVS 4-5	367	245	612	170	142	27
CVS 4-6	394	245	639	170	142	27
CVS 4-7	431	290	721	190	155	33
CVS 4-8	458	290	748	190	155	33
CVS 4-10	512	290	802	190	155	37
CVS 4-12	566	290	856	190	155	38
CVS 4-14	630	315	945	197	165	46
CVS 4-16	684	315	999	197	165	48
CVS 4-19	765	335	1100	230	188	57
CVS 4-22	846	335	1181	230	188	59

Performance curve

ISO9906 Annex A 2900rpm

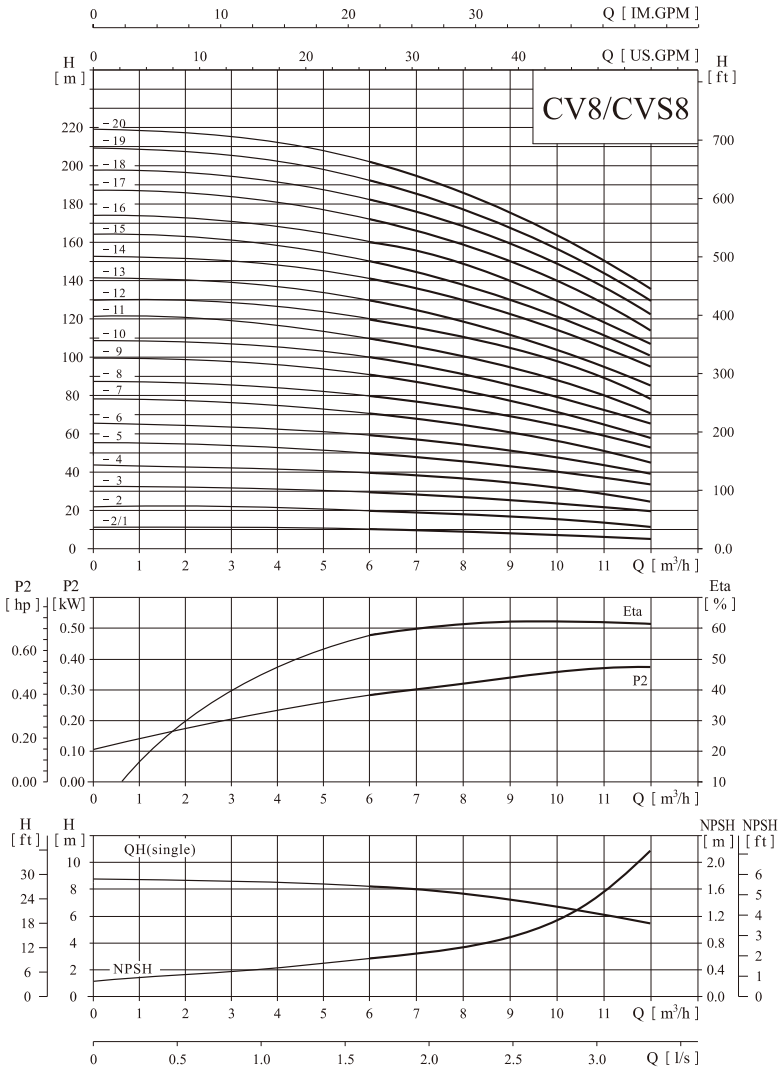

Installation sketch

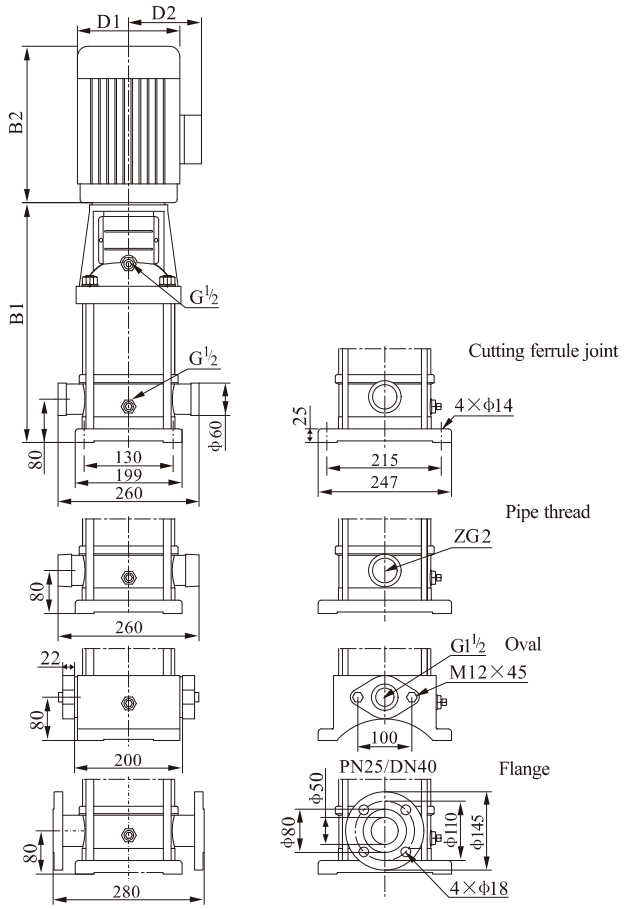

CVS 8-14 ~ 8-20 sub-connection of pipeline has no oval flange connection. The overall dimensions of the single-phase motor and explosion-proof motor are a little different. Pls contact us for details.

Performance table

Model	Driving motor (kW)	Driving motor (hp)	Q (m³/h)	5	6	7	8	9	10	11	12
CVS 8-2/1	0.75	1	H (m)	10	9.5	9.3	9	8.5	8	7	6
CVS 8-2	0.75	1		20	19.5	19	18	17	16	14	13
CVS 8-3	1.1	1.5		30	29.5	28.5	27	25	24	21	19
CVS 8-4	1.5	2		41	39.5	38	36	34	32	28	26
CVS 8-5	2.2	3		52	50	48	45	42	40	36	32
CVS 8-6	2.2	3		62	60	57	54	51	48	43	39
CVS 8-8	3.0	4		83	80	77	73	69	65	58	52
CVS 8-10	4.0	5.5		104	100	97	92	87	81	73	65
CVS 8-12	4.0	5.5		124	120	116	111	104	92	87	78
CVS 8-14	5.5	7.5		145	141	136	130	122	113	102	92
CVS 8-16	5.5	7.5		166	161	156	148	139	130	118	106
CVS 8-18	7.5	10		187	182	175	167	157	146	134	120
CVS 8-20	7.5	10		208	202	195	186	175	163	150	135

Size and weight

Model	Size (mm) B1	B2	B1+B2	D1	D2	Weight (kg)
CVS 8-2/1	347	245	592	170	142	32
CVS 8-2	347	245	592	170	142	32
CVS 8-3	377	245	622	170	142	34
CVS 8-4	417	290	707	190	155	40
CVS 8-5	447	290	737	190	155	44
CVS 8-6	477	290	767	190	155	45
CVS 8-8	547	315	862	197	165	53
CVS 8-10	607	335	942	230	188	64
CVS 8-12	667	335	1002	230	188	66
CVS 8-14	747	430	1177	260	208	81
CVS 8-16	807	430	1237	260	208	84
CVS 8-18	867	430	1297	260	208	93
CVS 8-20	927	430	1357	260	208	94

Performance curve

ISO9906 Annex A 2900rpm

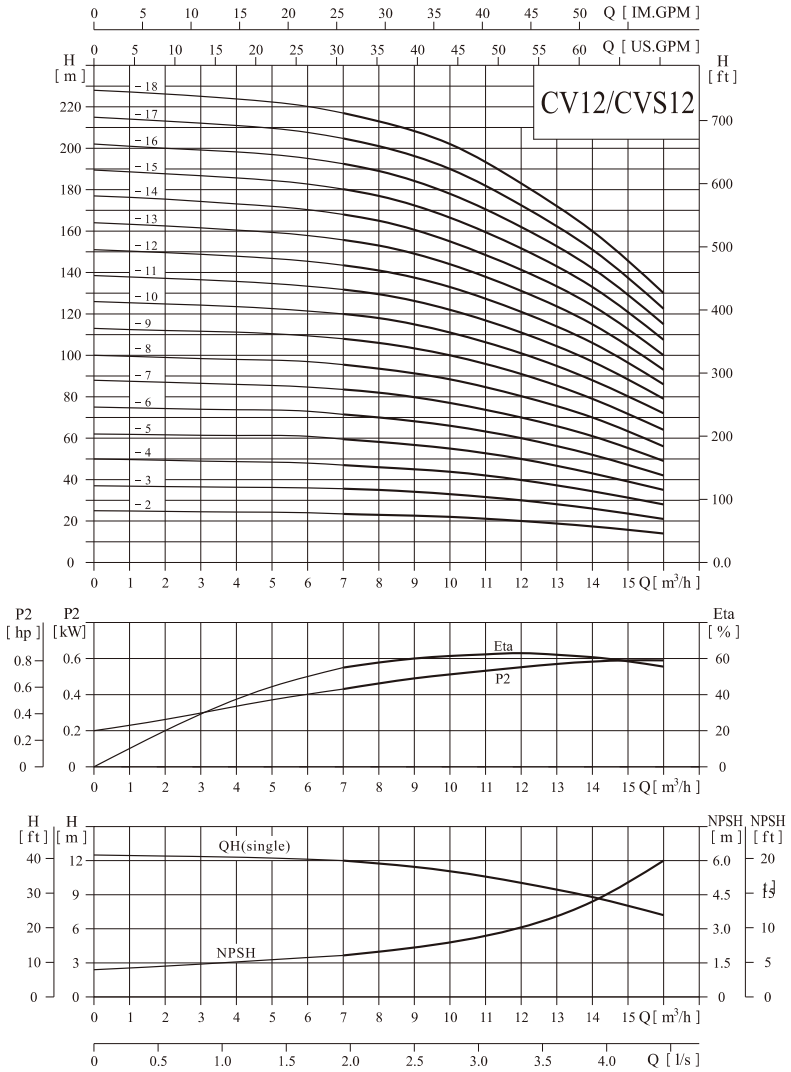

Installation sketch

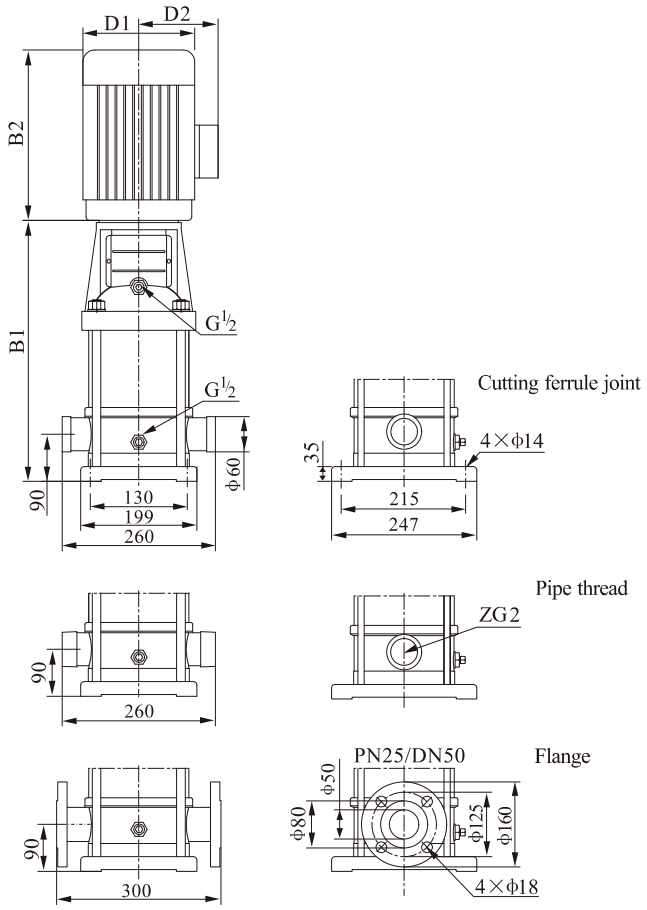

The overall dimensions of the single-phase motor and explosion-proof motor are a little different. Pls contact us for details.

Performance table

Model	Driving motor (kW)	Driving motor (hp)	Q (m³/h)	7	8	9	10	11	12	13	14	15	16
CVS 12-2	1.5	2	H (m)	23.5	23	22.5	22	21	20	18.5	17	15.5	14
CVS 12-3	2.2	3		35.5	35	34	33	31.5	30	28	26	23.5	21
CVS 12-4	3	4		47	46	45	44	42	40	37	34	31	28
CVS 12-5	3	4		59.5	58	56.5	55	52.5	50	46.5	43	39	35
CVS 12-6	4	5.5		71.5	70	68	66	63	60	56	52	47	42
CVS 12-7	5.5	7.5		83.5	82	79.5	77	73.5	70	65.5	61	55	49
CVS 12-8	5.5	7.5		95.5	94	91	88	84	80	75	70	63	56
CVS 12-9	5.5	7.5		108	106	103	100	95.5	91	85	79	71.5	64
CVS 12-10	7.5	10		120	118	114.5	111	106	101	94.5	88	80	72
CVS 12-12	7.5	10		143.5	141	137	133	127	121	113.5	106	96	86
CVS 12-14	11	15		168	165	160	155	148	141	132.5	124	112	100
CVS 12-16	11	15		192.5	189	183.5	178	170	162	152	142	128.5	115
CVS 12-18	11	15		217	213	207.5	202	192.5	183	171.5	160	145	130

Size and weight

Model	Size (mm) B1	B2	B1+B2	D1	D2	Weight (kg)
CVS 12-2	367	290	657	190	155	39
CVS 12-3	397	290	687	190	155	43
CVS 12-4	437	315	752	197	165	51
CVS 12-5	467	315	782	197	165	53
CVS 12-6	497	335	832	230	188	61
CVS 12-7	547	430	977	260	208	73
CVS 12-8	577	430	1007	260	208	74
CVS 12-9	607	430	1037	260	208	76
CVS 12-10	637	430	1067	260	208	83
CVS 12-12	697	430	1127	260	208	87
CVS 12-14	845	490	1335	330	255	157
CVS 12-16	905	490	1395	330	255	161
CVS 12-18	965	490	1455	330	255	164

Performance curve

ISO9906 Annex A 2900rpm

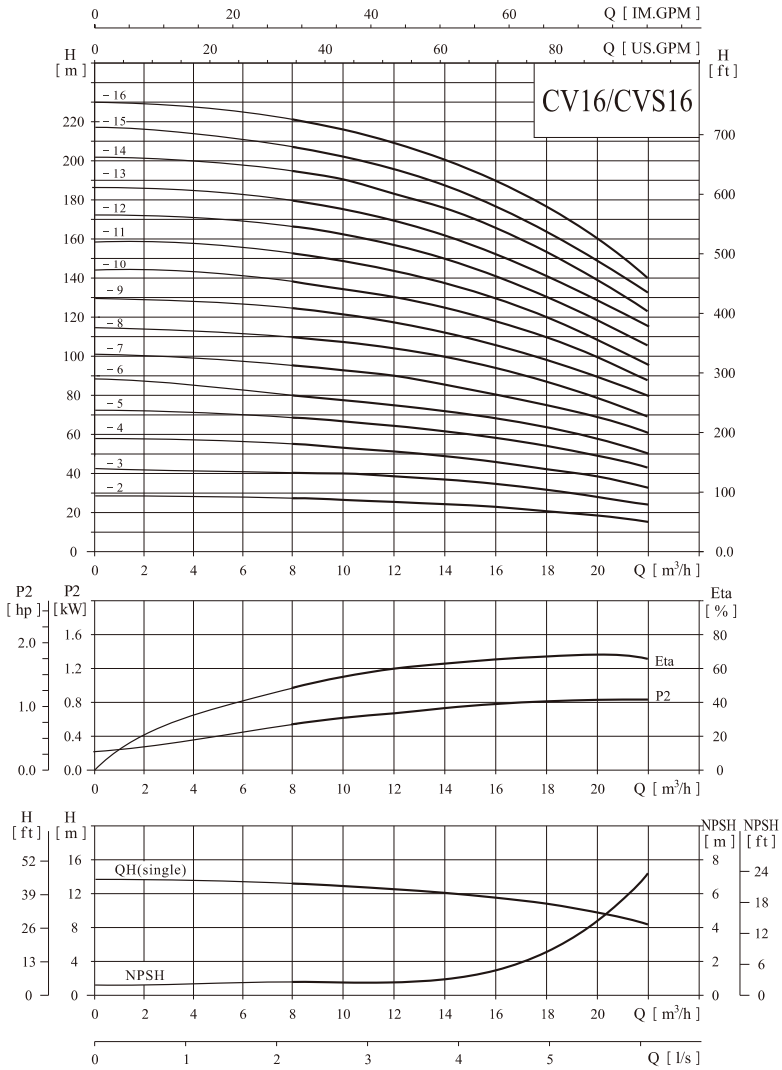

Installation sketch

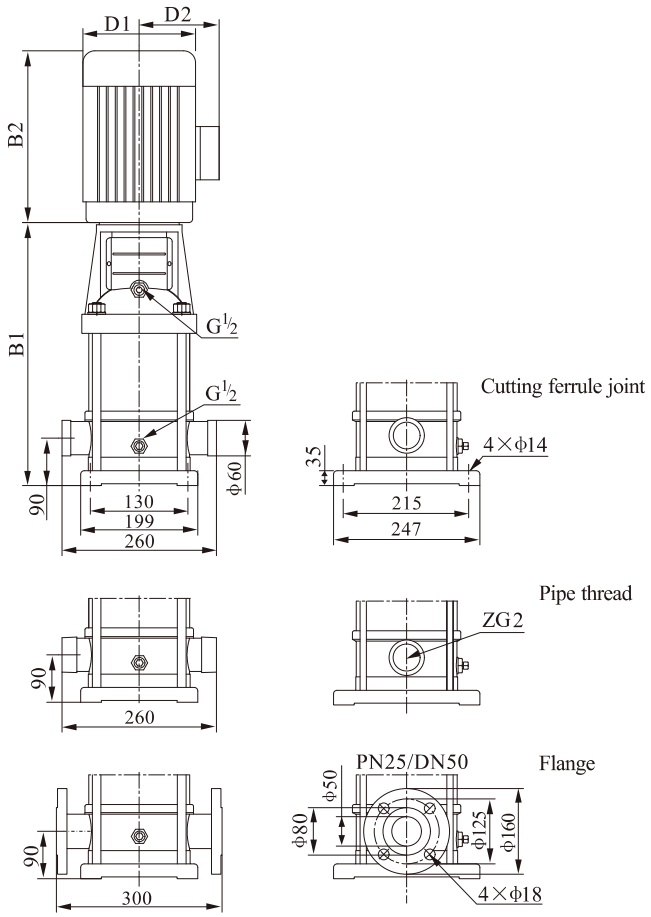

The overall dimensions of the single-phase motor and explosion-proof motor are a little different. Pls contact us for details.

Performance table

Model	Driving motor (kW)	Driving motor (hp)	Q (m³/h)	8	10	12	14	16	18	20	22
CVS 16-2	2.2	3	H (m)	27	26	25	24	22	21	19	16
CVS 16-3	3.0	4		41	40	38	37	34	32	29	25
CVS 16-4	4.0	5.5		54	53	52	49	46	43	38	34
CVS 16-5	5.5	7.5		68	67	65	62	58	54	48	43
CVS 16-6	5.5	7.5		82	80	78	74	70	64	58	52
CVS 16-7	7.5	10		96	95	91	87	82	76	68	61
CVS 16-8	7.5	10		110	108	104	99	94	86	77	70
CVS 16-10	11	15		138	136	131	125	118	109	97	87
CVS 16-12	11	15		166	162	157	150	141	130	116	105
CVS 16-14	15	20		194	190	184	175	166	152	136	122
CVS 16-16	15	20		222	217	210	200	189	174	156	140

Size and weight

Model	Size (mm) B1	B2	B1+B2	D1	D2	Weight (kg)
CVS 16-2	397	290	687	190	155	42
CVS 16-3	452	315	767	197	165	50
CVS 16-4	497	335	832	230	188	59
CVS 16-5	562	430	992	260	208	76
CVS 16-6	607	430	1037	260	208	77
CVS 16-7	652	430	1082	260	208	84
CVS 16-8	697	430	1127	260	208	86
CVS 16-10	875	490	1365	330	255	158
CVS 16-12	965	490	1455	330	255	161
CVS 16-14	1055	490	1545	330	255	174
CVS 16-16	1145	490	1635	330	255	178

Performance curve

ISO9906 Annex A 2900rpm

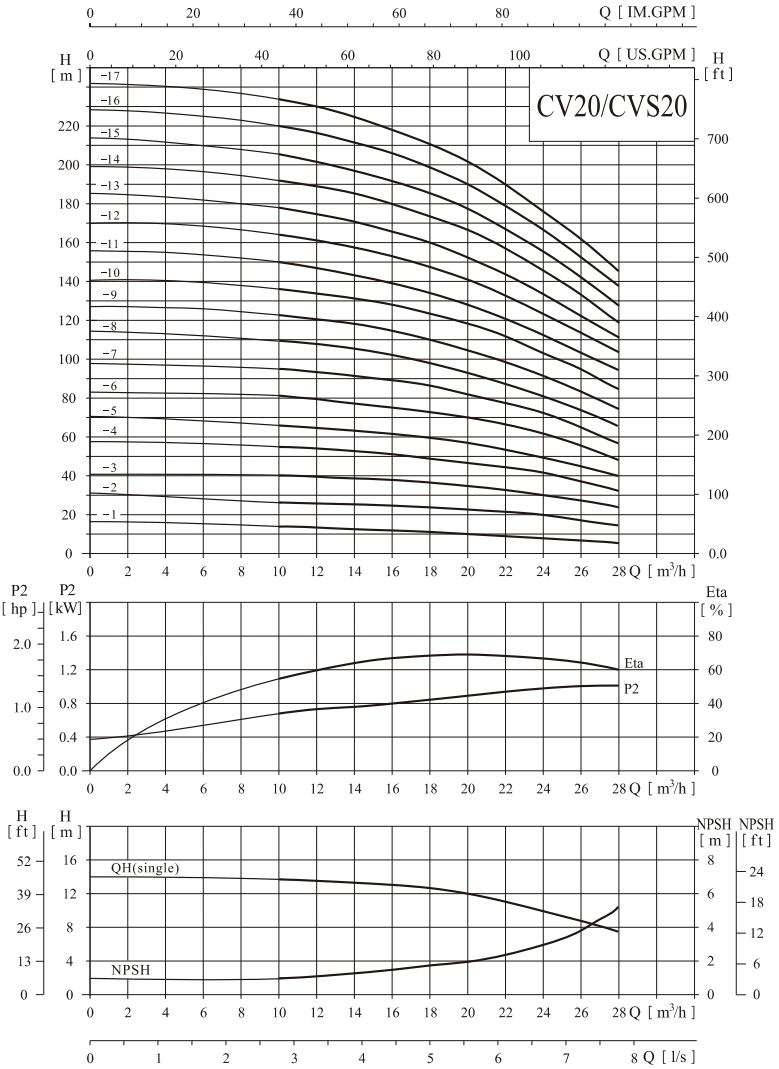

Installation sketch

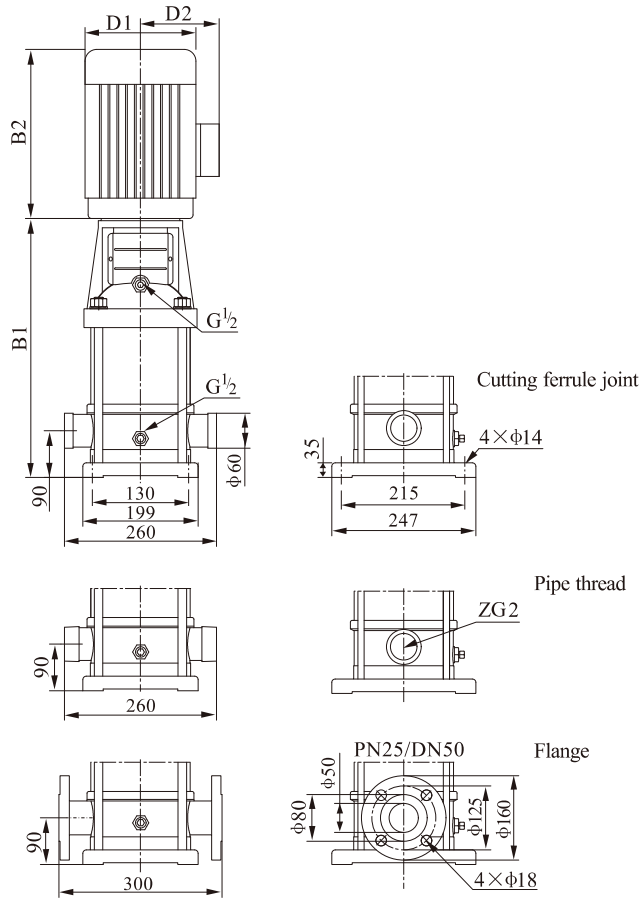

The overall dimensions of the single-phase motor and explosion-proof motor are a little different. Pls contact us for details.

Performance table

Model	Driving motor (kW)	Driving motor (hp)	Q (m³/h)	10	12	14	16	18	20	22	24	26	28
CVS 20-1	1.1	1.5	H (m)	13.5	13	12.5	12	11	10	9	8	7	6
CVS 20-2	2.2	3		27	26.5	26	25	24	23	22	20	18	15
CVS 20-3	4.0	5.5		40	39.5	39	38	37	35	33	30	27	24
CVS 20-4	5.5	7.5		54	53	52	51	49	47	44	41	37	33
CVS 20-5	5.5	7.5		67	66	64	62	60	58	55	50	45	40
CVS 20-6	7.5	10		81	79	77	75	73	70	66	61	55	49
CVS 20-7	7.5	10		95	93	91	89	86	82	77	71	65	58
CVS 20-8	11	15		109	107	105	102	99	94	89	82	75	67
CVS 20-10	11	15		136	134	131	128	124	118	111	103	95	85
CVS 20-12	15	20		164	162	158	154	149	142	133	124	114	102
CVS 20-14	15	20		192	189	185	180	174	166	156	145	133	119
CVS 20-17	18.5	25		234	230	225	219	212	202	190	177	162	145

Size and weight

Model	Size (mm) B1	B2	B1+B2	D1	D2	Weight (kg)
CVS 20-1	387	245	632	170	142	33
CVS 20-2	397	290	687	190	155	42
CVS 20-3	452	335	787	230	188	58
CVS 20-4	517	430	947	260	208	74
CVS 20-5	562	430	992	260	208	76
CVS 20-6	607	430	1037	260	208	82
CVS 20-7	652	430	1082	260	208	84
CVS 20-8	785	490	1275	330	255	153
CVS 20-10	875	490	1365	330	255	157
CVS 20-12	965	490	1455	330	255	170
CVS 20-14	1055	490	1545	330	255	172
CVS 20-17	1190	550	1740	330	255	195

Performance curve

ISO9906 Annex A 2900rpm

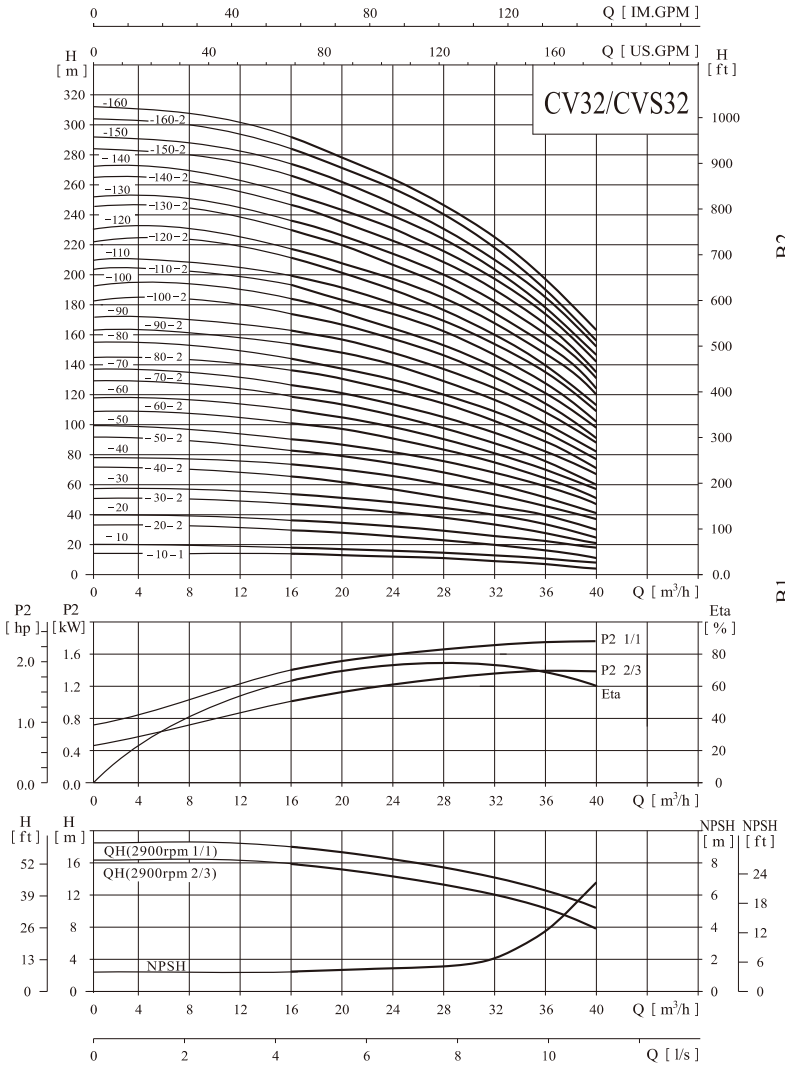

Installation sketch

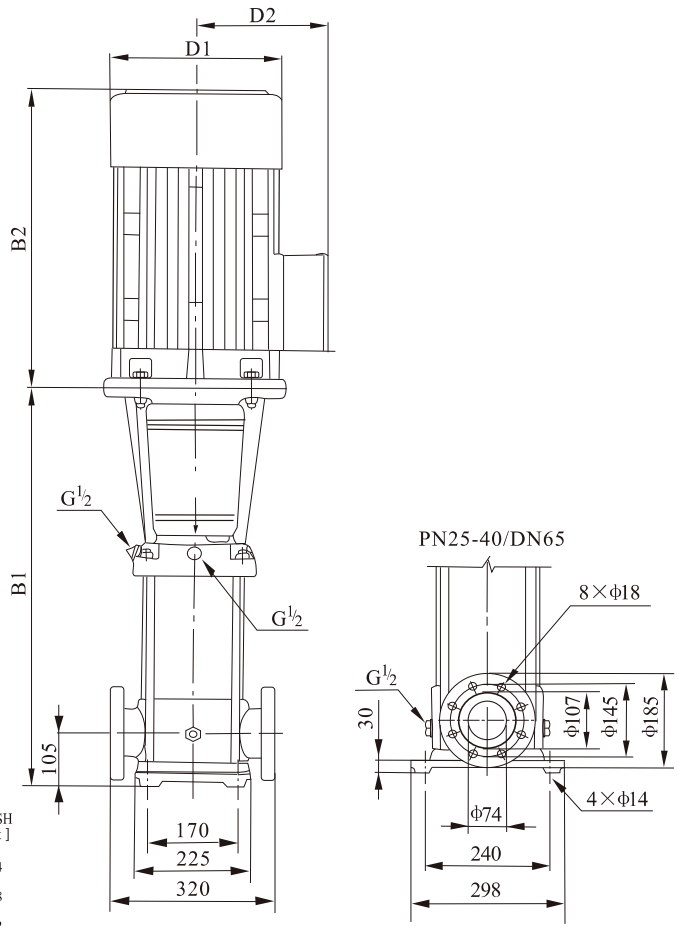

The overall dimensions of the single-phase motor and explosion-proof motor are a little different. Pls contact us for details.

Performance table

Model	Driving motor (kW)	Driving motor (hp)	Q (m³/h)	16	20	24	28	32	36	40
CVS32-10-1	1.5	2	H (m)	14	13	12	11	9	7	4
CVS32-10	2.2	3		18	17	15	14	13	11	8
CVS32-20-2	3.0	4		29	28	26	23	20	16	11
CVS32-20	4.0	5.5		36	34	32	29	27	23	18
CVS32-30-2	5.5	7.5		47	44	41	38	33	28	21
CVS32-30	5.5	7.5		54	51	48	44	40	35	27
CVS32-40-2	7.5	10		65	62	58	53	46	40	30
CVS32-40	7.5	10		72	69	65	59	53	47	37
CVS32-50-2	11	15		83	79	74	68	60	52	41
CVS32-50	11	15		90	86	81	74	67	59	47
CVS32-60-2	11	15		101	97	90	83	74	65	51
CVS32-60	11	15		108	104	97	90	81	72	57
CVS32-70-2	15	20		119	114	107	98	88	78	60
CVS32-70	15	20		126	121	113	105	95	85	67
CVS32-80-2	15	20		136	131	123	114	102	90	71
CVS32-80	15	20		144	138	130	120	109	97	77

Model	Driving motor (kW)	Driving motor (hp)	Q (m³/h)	16	20	24	28	32	36	40
CV32-90-2	18.5	25	H (m)	154	148	140	129	117	102	82
CV32-90	18.5	25		162	156	147	136	124	109	88
CV32-100-2	18.5	25		175	166	157	146	131	115	91
CV32-100	18.5	25		182	173	164	152	138	122	98
CV32-110-2	22	30		193	184	173	164	146	128	102
CV32-110	22	30		200	191	180	168	153	135	109
CV32-120-2	22	30		211	201	189	178	160	140	113
CV32-120	22	30		218	208	196	184	167	147	120
CV32-130-2	30	40		230	218	206	193	174	153	124
CV32-130	30	40		237	225	213	200	181	160	131
CV32-140-2	30	40		247	235	222	210	189	165	135
CV32-140	30	40		255	242	229	216	196	172	142
CV32-150-2	30	40		266	253	239	224	203	178	145
CV32-150	30	40		274	260	246	231	210	185	152
CV32-160-2	30	40		284	270	255	240	218	190	156
CV32-160	30	40		292	277	262	246	225	197	163

Size and weight

Model	Size (mm) B1	B2	B1+B2	D1	D2	Weight (kg)
CVS 32-10-1/ CVS 32-10	505	290	795	190	155	64/68
CVS 32-20-2/ CVS 32-20	575	315/335	890/910	197/230	165/180	77/85
CVS 32-30-2/ CVS 32-30	645	430	1075	260	208	100
CVS 32-40-2/ CVS 32-40	715	430	1145	260	208	109
CVS 32-50-2/ CVS 32-50	890	490	1380	330	255	181
CVS 32-60-2/ CVS 32-60	960	490	1450	330	255	185
CVS 32-70-2/ CVS 32-70	1030	490	1520	330	255	199
CVS 32-80-2/ CVS 32-80	1100	490	1590	330	255	203
CVS 32-90-2/ CVS 32-90	1170	550	1720	330	255	222
CVS 32-100-2/ CVS 32-100	1240	550	1790	330	255	227
CVS 32-110-2/ CVS 32-110	1310	590	1900	360	285	272
CVS 32-120-2/ CVS 32-120	1380	590	1970	360	285	276
CVS 32-130-2/ CVS 32-130	1450	660	2110	400	310	337
CVS 32-140-2/ CVS 32-140	1520	660	2180	400	310	341
CVS 32-150-2/ CVS 32-150	1590	660	2250	400	310	345
CVS 32-160-2/ CVS 32-160	1660	660	2320	400	310	350

Performance curve

ISO9906 Annex A 2900rpm

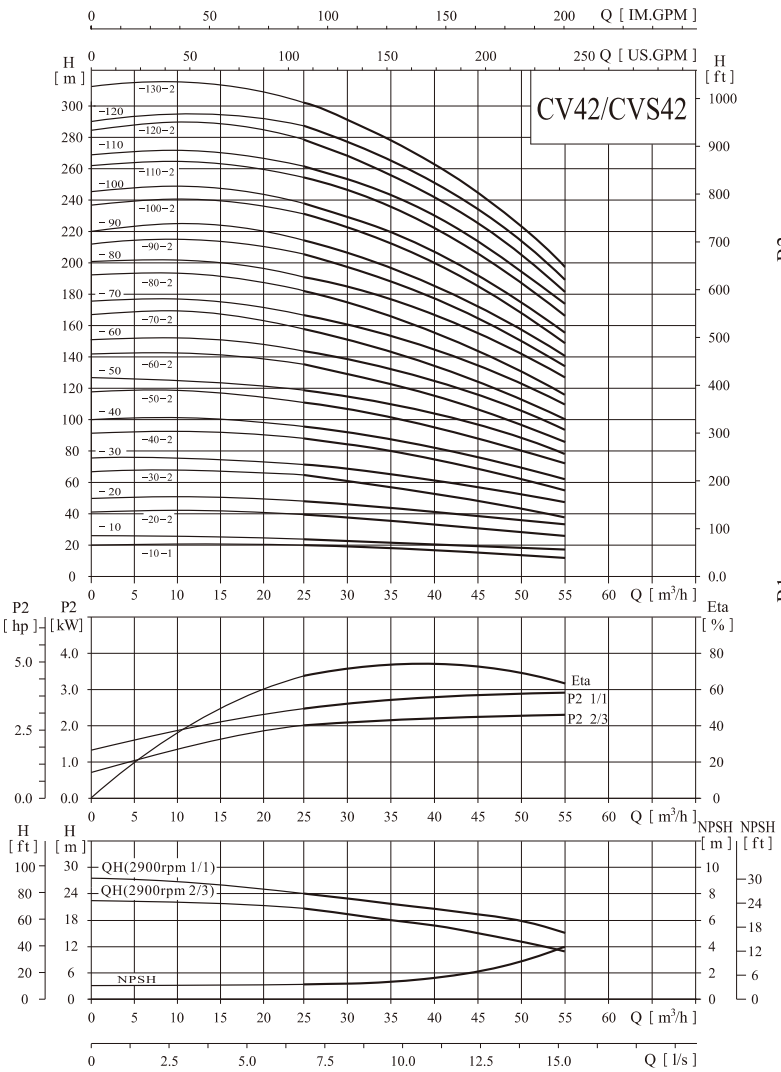

Installation sketch

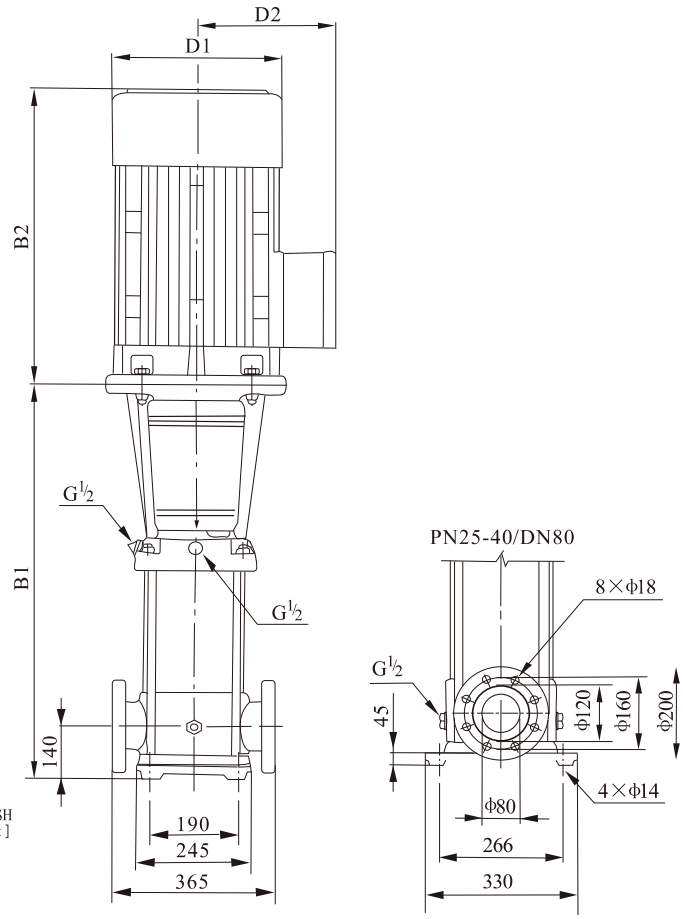

The overall dimensions of explosion-proof motor is a little different. Pls contact us for details.

Performance table

Model	Driving motor (kW)	Driving motor (hp)	Q (m³/h)	25	30	35	40	42	45	50	55
CVS42-10-1	3.0	4	H (m)	20	19	18	17	16	15	13	11
CVS42-10	4.0	5.5		24	23	22	21	20	19	18	16
CVS42-20-2	5.5	7.5		40	38	36	33	32	30	27	23
CVS42-20	7.5	10		48	46	44	42	41	39	35	31
CVS42-30-2	11	15		63	61	58	54	52	50	44	38
CVS42-30	11	15		71	69	66	63	61	58	53	47
CVS42-40-2	15	20		87	84	80	75	73	69	62	54
CVS42-40	15	20		95	92	88	84	81	78	71	62
CVS42-50-2	18.5	25		111	107	102	96	93	88	80	69
CVS42-50	18.5	25		119	115	110	105	101	97	88	78
CVS42-60-2	22	30		135	130	124	117	113	108	97	85
CVS42-60	22	30		143	138	132	125	122	116	106	93
CVS42-70-2	30	40		158	152	146	138	134	127	115	100
CVS42-70	30	40		166	161	154	146	142	135	124	109
CVS42-80-2	30	40		182	175	168	159	154	146	133	116
CVS42-80	30	40		190	184	176	167	162	154	141	124
CVS42-90-2	30	40		205	198	190	180	174	166	150	132
CVS42-90	37	50		214	207	198	188	183	174	159	140
CVS42-100-2	37	50		230	221	212	200	194	185	168	147
CVS42-100	37	50		238	230	220	209	203	193	177	155
CVS42-110-2	45	60		255	246	236	223	217	206	188	165
CVS42-110	45	60		263	255	244	232	225	214	196	173
CVS42-120-2	45	60		280	270	259	245	238	226	206	181
CVS42-120	45	60		289	280	268	255	247	236	216	190
CVS42-130-2	45	60		305	294	282	267	259	247	225	198

Size and weight

Model	Size (mm) B1	B2	B1+B2	D1	D2	Weight (kg)
CVS42-10-1 CVS42-10	561	315/335	876/896	197/230	165/188	83 /90
CVS42-20-2 CVS42-20	641	430	1071	260	208	105 /110
CVS42-30-2 CVS42-30	826	490	1316	330	255	183
CVS42-40-2 CVS42-40	906	490	1396	330	255	197
CVS42-50-2 CVS42-50	986	550	1536	330	255	221
CVS42-60-2 CVS42-60	1066	590	1656	360	285	261
CVS42-70-2 CVS42-70	1146	660	1806	400	310	320
CVS42-80-2 CVS42-80	1226	660	1886	400	310	324
CVS42-90-2 CVS42-90	1306	660	1966	400	310	328 /352
CVS42-100-2 CVS42-100	1386	660	2046	400	310	355
CVS42-110-2 CVS42-110	1466	700	2166	450	345	426
CVS42-120-2 CVS42-120	1546	700	2246	450	345	432
CVS42-130-2	1626	700	2326	450	345	438

Performance curve

ISO9906 Annex A 2900rpm

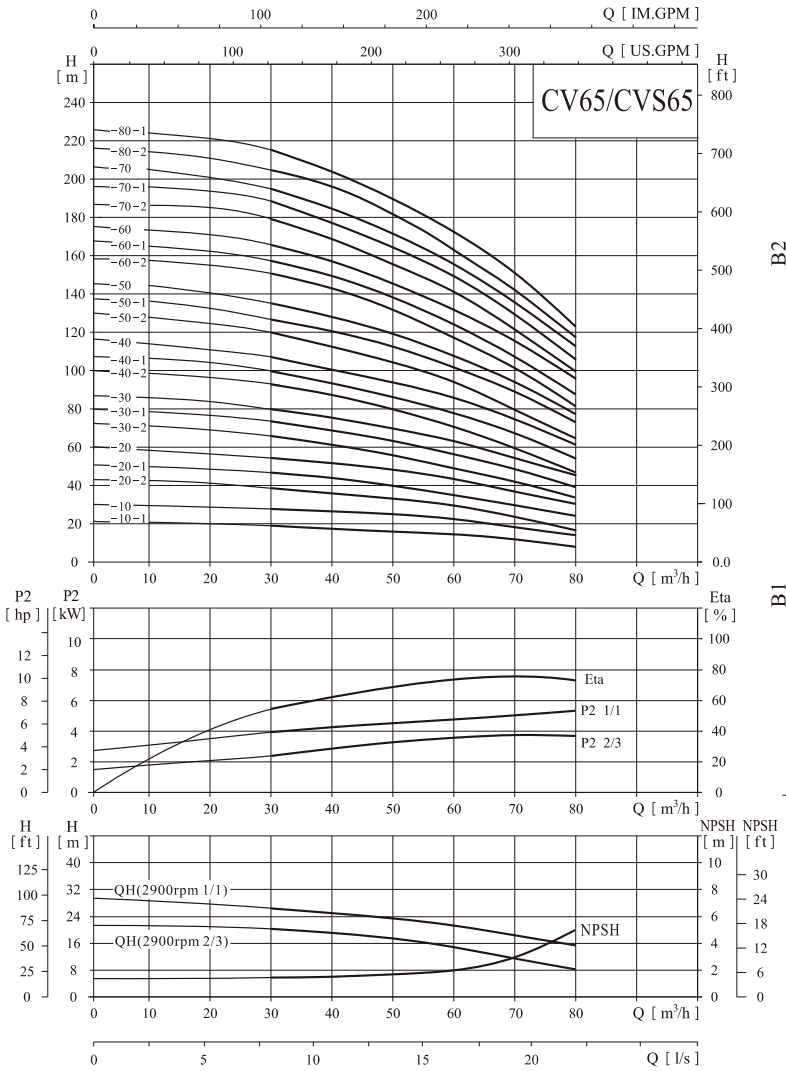

Installation sketch

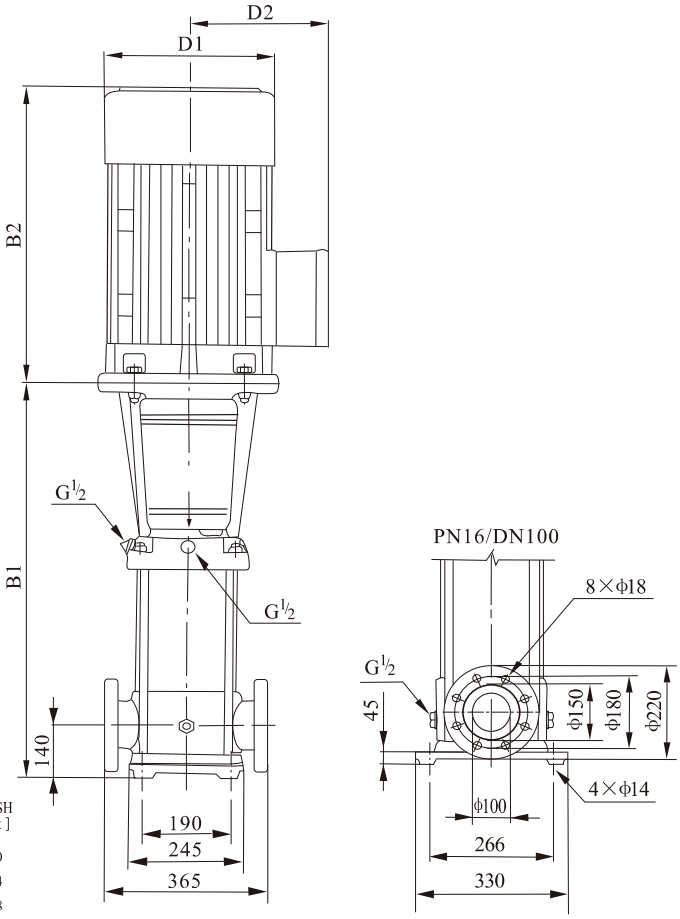

The overall dimensions of explosion-proof motor is a little different. Pls contact us for details.
（For CV 65 series, PN25-40/DN100 standard flange is also available if required）

Performance table

Model	Driving motor (kW)	Driving motor (hp)	Q (m³/h)	30	40	50	60	65	70	80
CVS 65-10-1	4.0	5.5	H (m)	19	18	16	14	13	11	8
CVS 65-10	5.5	7.5		27	25	23	21	20	18	15
CVS 65-20-2	7.5	10		39	36	33	29	26	23	17
CVS 65-20-1	11	15		46	44	40	36	33	30	24
CVS 65-20	11	15		53	51	47	43	40	37	30
CVS 65-30-2	15	20		66	62	56	50	46	41	32
CVS 65-30-1	15	20		73	69	63	57	53	48	39
CVS 65-30	18.5	25		80	76	70	64	60	55	46
CVS 65-40-2	18.5	25		92	87	80	71	66	60	47
CVS 65-40-1	22	30		100	94	87	78	73	67	54
CVS 65-40	22	30		107	101	94	85	80	74	61
CVS 65-50-2	30	40		121	114	105	95	88	80	64
CVS 65-50-1	30	40		128	121	112	102	95	87	71
CVS 65-50	30	40		136	129	119	109	102	94	78
CVS 65-60-2	30	40		150	142	131	118	110	101	81
CVS 65-60-1	37	50		157	149	138	125	117	108	88
CVS 65-60	37	50		164	156	145	132	124	115	95
CVS 65-70-2	37	50		179	169	156	141	132	121	99
CVS 65-70-1	37	50		186	176	163	148	139	128	106
CVS 65-70	45	60		193	183	170	155	146	135	112
CVS 65-80-2	45	60		207	196	182	164	154	142	116
CVS 65-80-1	45	60		215	203	189	171	161	149	123

Size and weight

Model	Size (mm) B1	B2	B1+B2	D1	D2	Weight (kg)
CVS 65-10-1	561	335	896	230	188	93
CVS 65-10	561	430	991	260	208	105
CVS 65-20-2	644	430	1074	260	208	110
CVS 65-20-1	754	490	1244	330	255	182
CVS 65-20	754	490	1244	330	255	182
CVS 65-30-2	836	490	1326	330	255	196
CVS 65-30-1	836	490	1326	330	255	197
CVS 65-30	836	550	1386	330	255	221
CVS 65-40-2	919	550	1469	330	255	225
CVS 65-40-1	919	590	1509	360	285	258
CVS 65-40	919	590	1509	360	285	258
CVS 65-50-2	1001	660	1661	400	310	319
CVS 65-50-1	1001	660	1661	400	310	319
CVS 65-50	1001	660	1661	400	310	320
CVS 65-60-2	1084	660	1744	400	310	325
CVS 65-60-1	1084	660	1744	400	310	349
CVS 65-60	1084	660	1744	400	310	349
CVS 65-70-2	1166	660	1826	400	310	353
CVS 65-70-1	1166	660	1826	400	310	353
CVS 65-70	1166	700	1866	460	340	420
CVS 65-80-2	1248	700	1948	460	340	424
CVS 65-80-1	1248	700	1948	460	340	424

Performance curve

ISO9906 Annex A 2900rpm

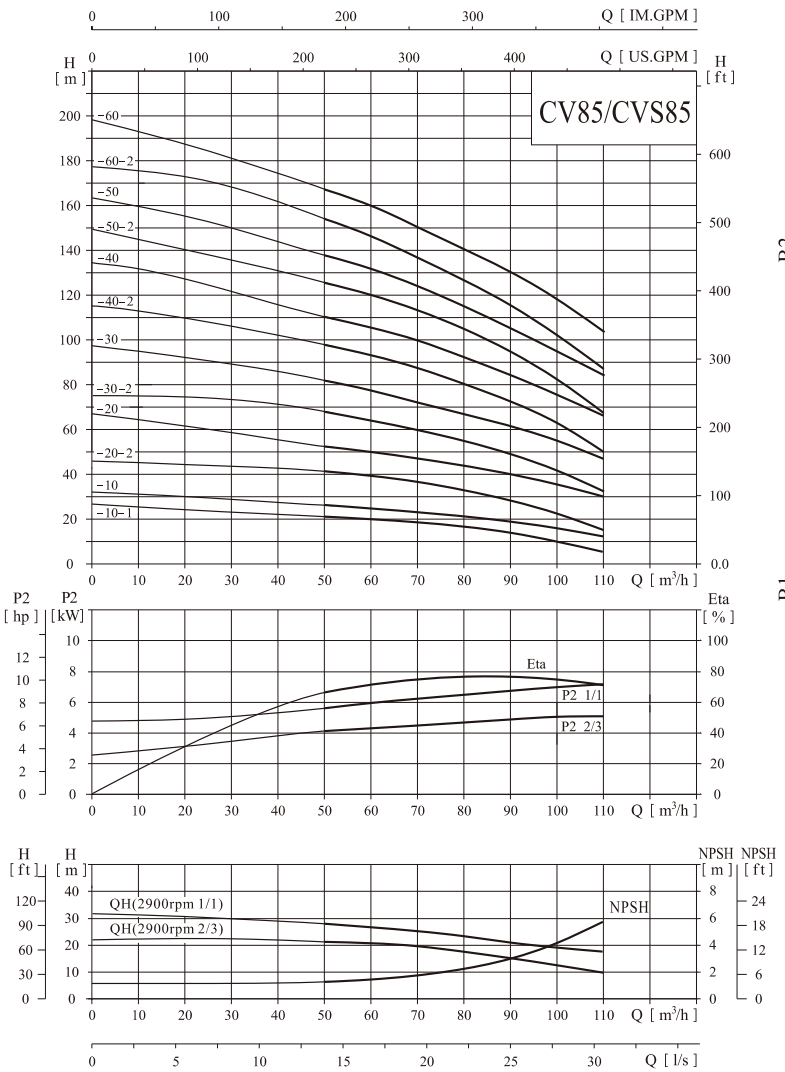

Installation sketch

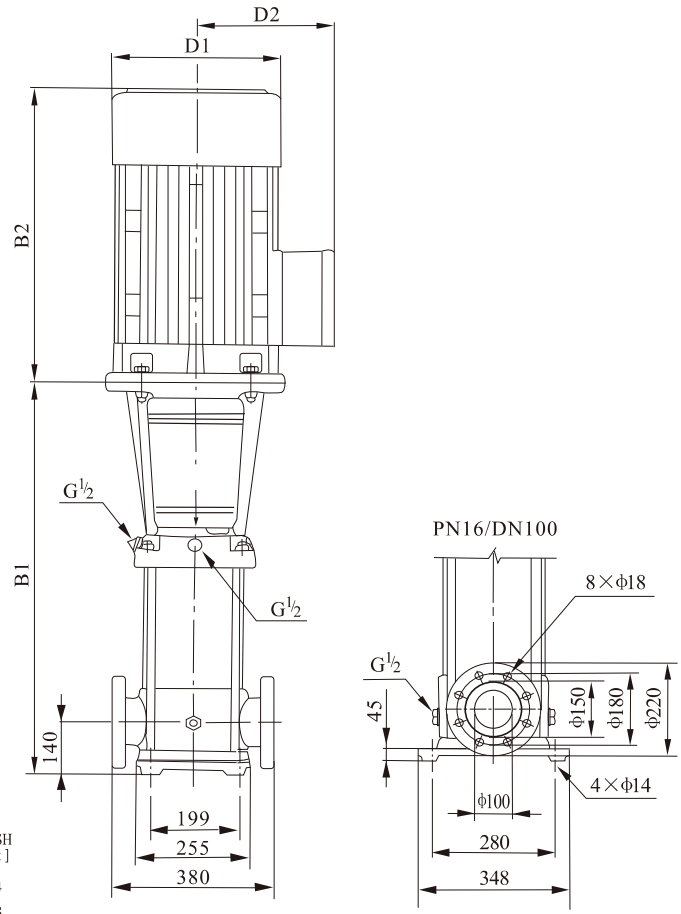

The overall dimensions of explosion-proof motor is a little different. Pls contact us for details.
（For CV 85 series, PN25-40/DN100 standard flange is also available if required）

Performance table

Model	Driving motor (kW)	Driving motor (hp)	Q (m³/h)	50	60	70	80	85	90	100	110
CVS 85-10-1	5.5	7.5	H (m)	22	19	17	16	14	13	10	6
CVS 85-10	7.5	10		25	24	22	21	20	19	16	12
CVS 85-20-2	11	15		41	39	36	32	30	28	22	15
CVS 85-20	15	20		53	50	47	44	41	40	36	30
CVS 85-30-2	18.5	25		68	65	60	55	52	49	41	32
CVS 85-30	22	30		81	77	72	67	64	62	55	48
CVS 85-40-2	30	40		98	93	87	80	75	72	62	50
CVS 85-40	30	40		110	105	100	92	86	84	76	66
CVS 85-50-2	37	50		126	120	113	104	98	93	81	68
CVS 85-50	37	50		139	131	124	115	110	106	94	83
CVS 85-60-2	45	60		155	148	139	129	122	117	102	86
CVS 85-60	45	60		168	160	150	141	134	130	117	103

Size and weight

Model	Size (mm) B1	B2	B1+B2	D1	D2	Weight (kg)
CVS 85-10-1	571	430	1001	260	208	105
CVS 85-10	571	430	1001	260	208	110
CVS 85-20-2	773	490	1263	330	255	181
CVS 85-20	773	490	1263	330	255	192
CVS 85-30-2	865	550	1415	330	255	215
CVS 85-30	865	590	1455	360	285	252
CVS 85-40-2	957	660	1617	400	310	312
CVS 85-40	957	660	1617	400	310	312
CVS 85-50-2	1049	660	1709	400	310	336
CVS 85-50	1049	660	1709	400	310	336
CVS 85-60-2	1141	700	1841	460	340	407
CVS 85-60	1141	700	1841	460	340	407

Performance curve

ISO9906 Annex A 2950rpm

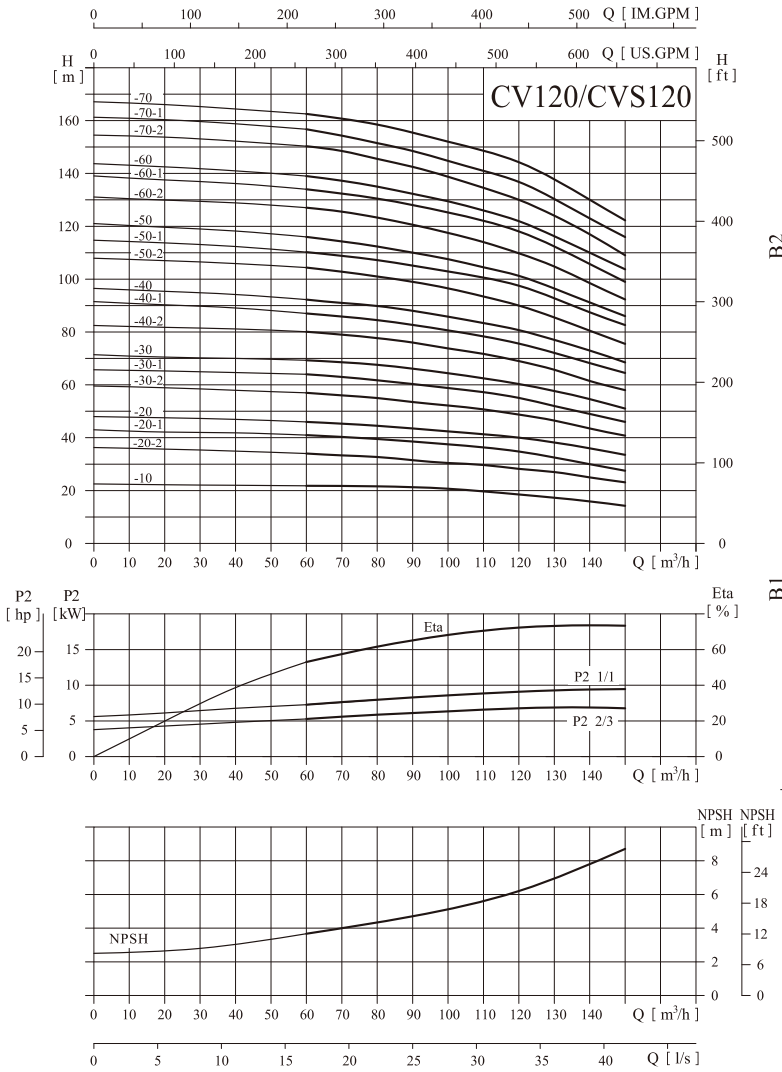

Installation sketch

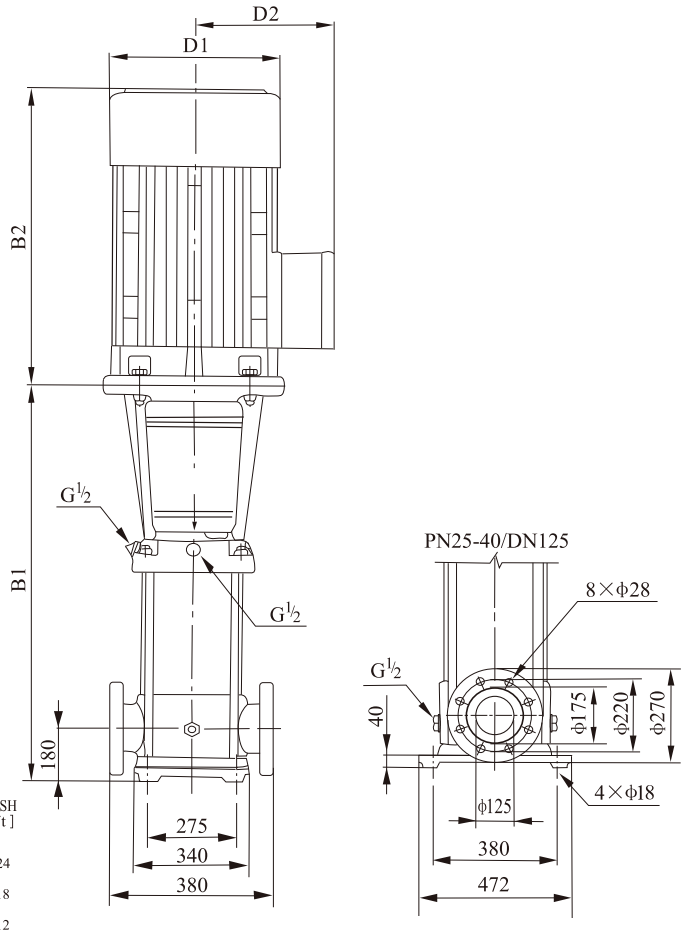

The overall dimensions of explosion-proof motor is a little different. Pls contact us for details.

Performance table

Model	Driving motor (kW)	Driving motor (hp)	Q (m³/h)	60	70	80	90	100	110	120	130	140	150
CVS 120-10	11	15	H (m)	22	21.8	21.6	21	20.5	19.5	18.5	17	16	15
CVS 120-20-2	15	20		34	33.6	33	31	30.2	30	28.5	27	25	24
CVS 120-20-1	18.5	25		41	40	39.5	38.5	37	36.5	34.5	32.5	30	27.5
CVS 120-20	22	30		46	45	44.5	43.5	42.4	41	40	38	36	33.5
CVS 120-30-2	30	40		57	56	55	53.5	52	51	49	46.5	43.5	41
CVS 120-30-1	30	40		64	63	62	60	58.5	57.5	55.5	52	49	46
CVS 120-30	30	40		69.5	68.5	67.5	66	64.4	62.5	61	57.5	54.5	51
CVS 120-40-2	37	50		80.5	79	78	76	73.5	72	69	66	61.5	58
CVS 120-40-1	37	50		87	86	84.5	82	80	78	76	72	68	64.5
CVS 120-40	45	60		92.5	91	90	88	85.5	83	81	77	73	68.5
CVS 120-50-2	45	60		104.5	103	101	99	96	93	90	85.5	80.5	75.5
CVS 120-50-1	45	60		110.5	109	107.5	105	102	100	97	92	86.5	83
CVS 120-50	55	75		115.5	114	113	110	107.5	104.5	101.5	96	91	86
CVS 120-60-2	55	75		128	125.5	123	121	117.3	113.5	110	104.5	98.5	92.5
CVS 120-60-1	55	75		134	132	130.5	127	124	121	118	111	105	100
CVS 120-60	75	100		139	137	135	132	128.8	126	123	116	110	104
CVS 120-70-2	75	100		151	148	145.5	143	138.6	134	130	123.5	116.5	109
CVS 120-70-1	75	100		156.5	154	152	148.5	144.5	141	137.5	130	123	116.5
CVS 120-70	75	100		162.5	160.5	158.5	155	151	148	145	137	129	123

Size and weight

Model	Size (mm) B1	B2	B1+B2	D1	D2	Weight (kg)
CVS120-10	840	490	1330	330	255	230
CVS120-20-2	1000	490	1490	330	255	245
CVS120-20-1	1000	550	1550	330	255	250
CVS120-20	1000	590	1590	360	285	285
CVS120-30-2	1160	660	1820	400	310	360
CVS120-30-1	1160	660	1820	400	310	360
CVS120-30	1160	660	1820	400	310	360
CVS120-40-2	1320	660	1980	400	310	400
CVS120-40-1	1320	660	1980	400	310	400
CVS120-40	1320	700	2020	460	340	460
CVS120-50-2	1480	700	2180	460	340	470
CVS120-50-1	1480	700	2180	460	340	470
CVS120-50	1510	770	2280	540	370	575
CVS120-60-2	1670	770	2440	540	370	585
CVS120-60-1	1670	770	2440	540	370	585
CVS120-60	1670	845	2515	580	410	705
CVS120-70-2	1830	845	2675	580	410	715
CVS120-70-1	1830	845	2675	580	410	715
CVS120-70	1830	845	2675	580	410	715

Performance curve

ISO9906 Annex A 2950rpm

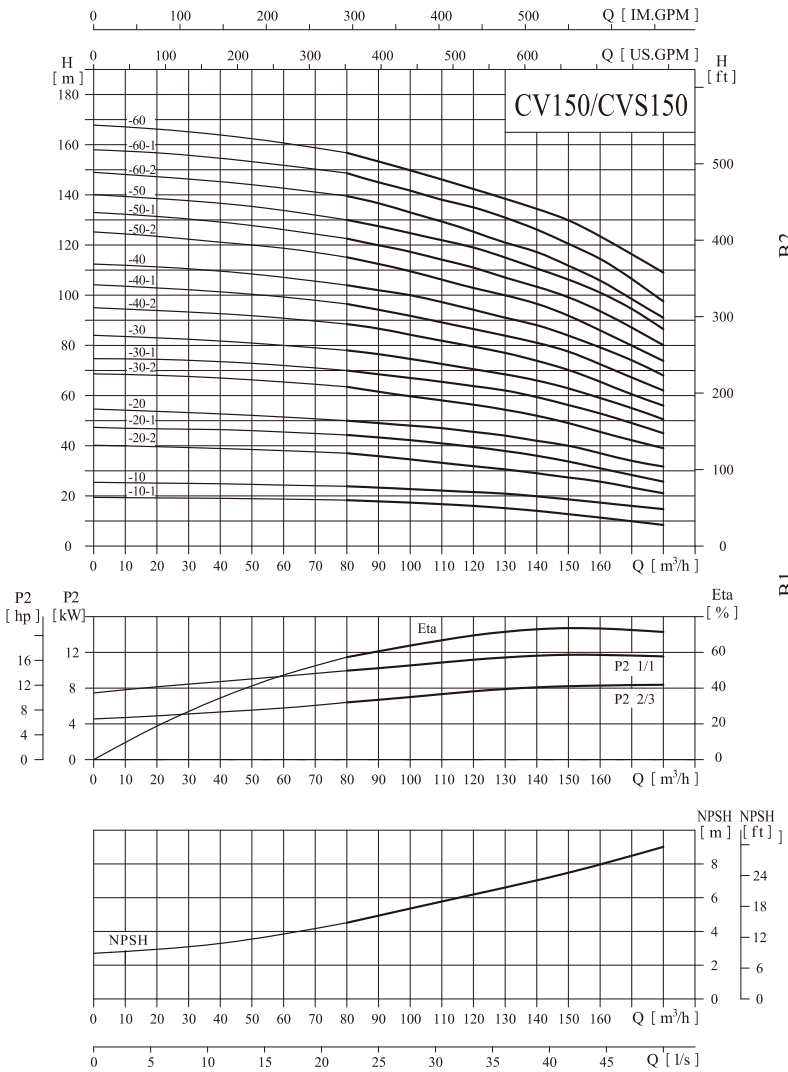

Installation sketch

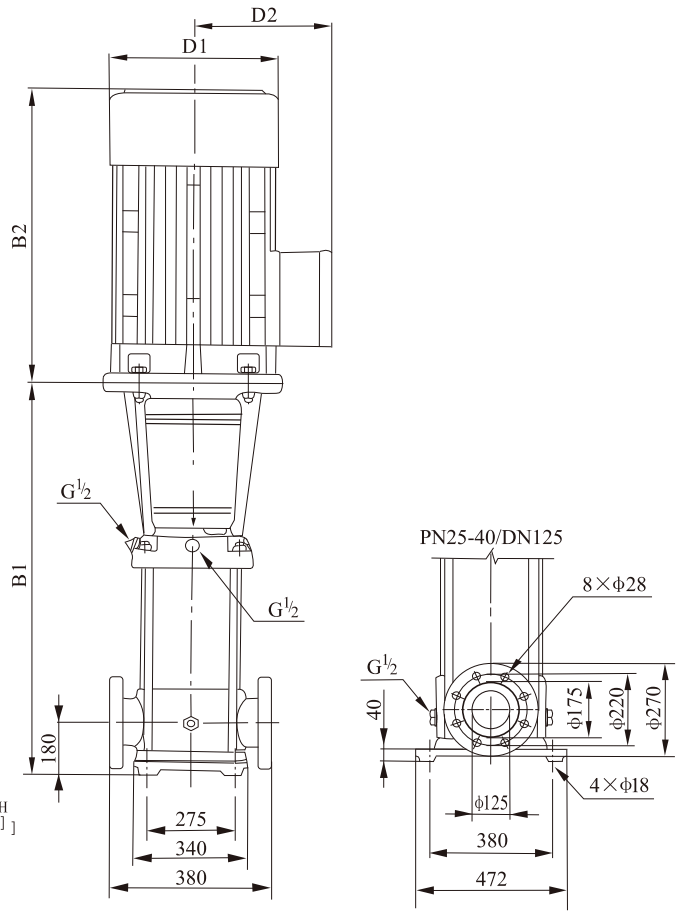

The overall dimensions of explosion-proof motor is a little different. Pls contact us for details.

Performance table

Model	Driving motor (kW)	Driving motor (hp)	Q (m³/h)	80	90	100	110	120	130	140	150	160	170	180
CVS 150-10-1	11	15	H (m)	18.3	17.8	17.3	17	16	15	14	12.5	11	10	8.5
CVS 150-10	15	20		24	23	22.5	22	21.5	20.5	20	18.5	17	16	15
CVS 150-20-2	18.5	25		37	35.5	34	33	32	31	29	27.5	26	23	21
CVS 150-20-1	22	30		44.3	43	42	40	39	38.5	37.5	35	33	30	27
CVS 150-20	30	40		50	49	48	47	45.5	44	42	40	37	34	32
CVS 150-30-2	30	40		63.5	61	59	57.5	56	54.5	53	49	45.5	42	39
CVS 150-30-1	37	50		70	68	67	65	63	62	60	56	53	49	45
CVS 150-30	37	50		78	76.5	75	73	70.5	68	66	63	59	55	50.5
CVS 150-40-2	45	60		89	87	84	81.5	79	77	74.5	70.5	65.5	60	56
CVS 150-40-1	45	60		96.5	94	91.5	89	86.5	84	81.5	77	72.5	67	62
CVS 150-40	55	75		104	102	100	97	95	91	88	84	79.5	74	68
CVS 150-50-2	55	75		115.5	112	109	106	102.5	100	97	92	86	79	73.5
CVS 150-50-1	75	100		122.5	119.5	117	113.5	111.5	107.5	104.5	99	93.5	87	80
CVS 150-50	75	100		130	127.5	125	121	119	115	111.5	106.5	101	94.5	86.5
CVS 150-60-2	75	100		140	137	133	130	126	121	118	112	106	98	91
CVS 150-60-1	75	100		148.5	145	141.7	137.5	135	131	127	120.5	114.5	106.5	97.5
CVS 150-60	75	100		157	153	149	145	142	139.5	137	130	123.5	116	109

Size and weight

Model	Size (mm) B1	B2	B1+B2	D1	D2	Weight (kg)
CVS 150-10-1	840	490	1330	330	255	230
CVS 150-10	840	490	1330	330	255	235
CVS 150-20-2	1000	550	1550	330	255	250
CVS 150-20-1	1000	590	1590	360	285	295
CVS 150-20	1000	660	1660	400	310	350
CVS 150-30-2	1160	660	1820	400	310	360
CVS 150-30-1	1160	660	1820	400	310	360
CVS 150-30	1160	660	1820	400	310	385
CVS 150-40-2	1320	700	2020	460	340	460
CVS 150-40-1	1320	700	2020	460	340	460
CVS 150-40	1350	770	2120	540	370	560
CVS 150-50-2	1510	770	2280	540	370	570
CVS 150-50-1	1510	845	2355	580	410	690
CVS 150-50	1510	845	2355	580	410	690
CVS 150-60-2	1670	845	2515	580	410	700
CVS 150-60-1	1670	845	2515	580	410	700
CVS 150-60	1670	845	2515	580	410	700

Performance curve

ISO9906 Annex A 2950rpm

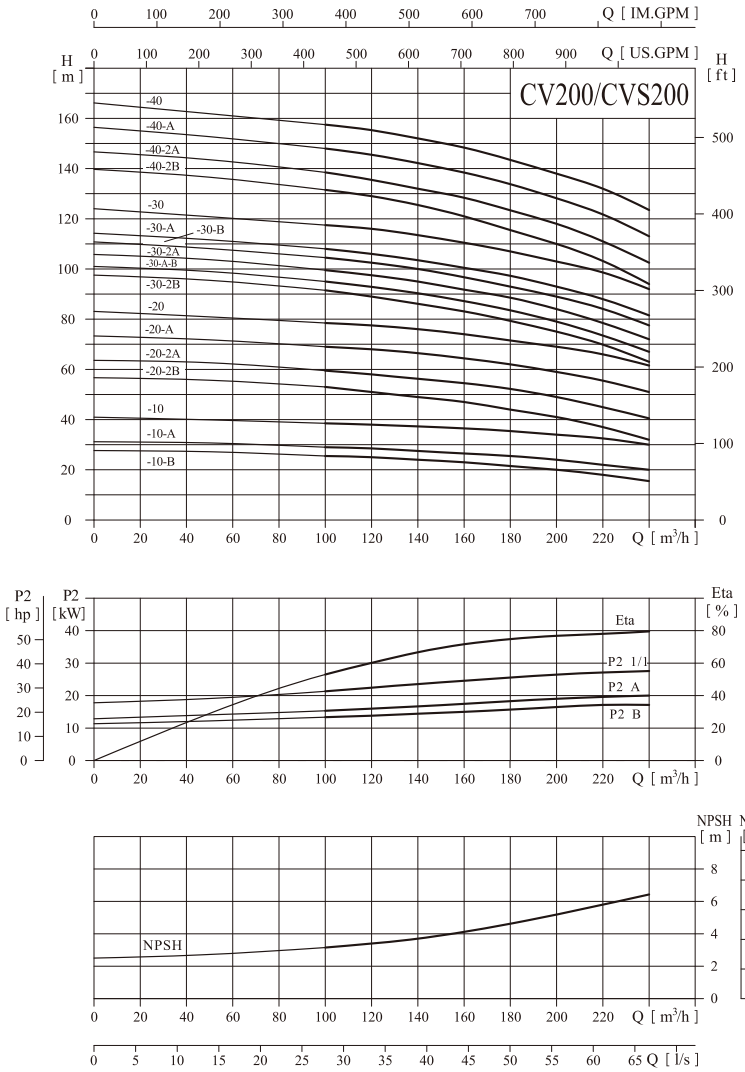

Installation sketch

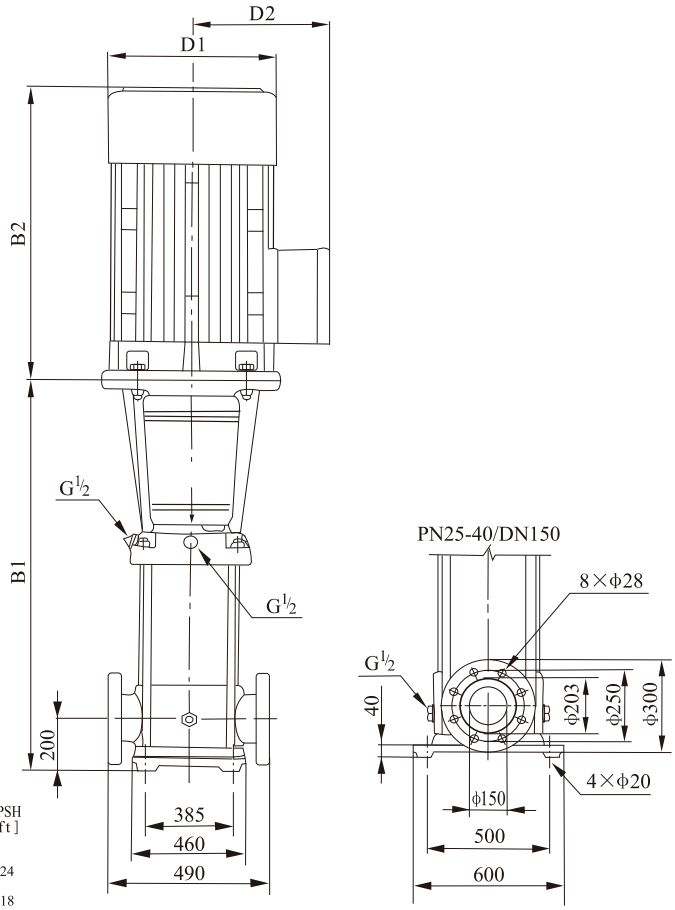

The overall dimensions of explosion-proof motor is a little different. Pls contact us for details.

Performance table

Model	Driving motor (kW)	Driving motor (hp)	Q (m³/h)	100	120	140	160	180	200	220	240
CVS 200-10-B	18.5	25	H (m)	25.5	25	24	23	21.5	20	18	15.5
CVS 200-10-A	22	30		29	28.5	27.5	26.5	25.5	24	22	20
CVS 200-10	30	40		38.5	38	37.5	36.5	35	34	32.5	30
CVS 200-20-2B	37	50		53	51	49	47	44	41	37	32
CVS 200-20-2A	45	60		59.5	58	56	54	52.5	49	44.5	40.5
CVS 200-20-A	55	75		69	68	66	64	62	59	55.5	51
CVS 200-20	55	75		78.5	77.5	76	74	71.5	69	66	61.5
CVS 200-30-2B	75	100		91.5	89	86.5	83.5	79	75	70	63
CVS 200-30-A-B	75	100		95	93	90	87	83.5	79	73.5	67
CVS 200-30-2A	75	100		99.5	97.5	94.5	91.5	89	84	78.5	72
CVS 200-30-B	75	100		104.5	102.5	100	97	93	89	84.5	77.5
CVS 200-30-A	75	100		108	106	103.5	100.5	97.5	93	88	81.5
CVS 200-30	90	120		117.5	116	113.5	110.5	107	103	99	92
CVS 200-40-2B	90	120		131.5	129	125.5	121	115.5	110	103.5	94
CVS 200-40-2A	110	150		138.5	136	132	128	124	118	111	102.5
CVS 200-40-A	110	150		148	145.5	142.5	138	134	128	122	113
CVS 200-40	110	150		157.5	155.5	152.5	148	143.5	138	132.5	123.5

Size and weight

Model	Size (mm) B1	B2	B1+B2	D1	D2	Weight (kg)
CVS 200-10-B	907	550	1457	330	255	311
CVS 200-10-A	907	590	1497	360	285	347
CVS 200-10	907	660	1567	400	310	403
CVS 200-20-2B	1101	660	1761	400	310	447
CVS 200-20-2A	1101	700	1801	460	340	504
CVS 200-20-A	1131	770	1901	540	370	595
CVS 200-20	1131	770	1901	540	370	595
CVS 200-30-2B	1325	845	2170	580	410	748
CVS 200-30-A-B	1325	845	2170	580	410	748
CVS 200-30-2A	1325	845	2170	580	410	748
CVS 200-30-B	1325	845	2170	580	410	748
CVS 200-30-A	1325	845	2170	580	410	748
CVS 200-30	1325	895	2220	580	410	817
CVS 200-40-2B	1519	895	2414	580	410	830
CVS 200-40-2A	1519	1140	2659	645	550	1180
CVS 200-40-A	1519	1140	2659	645	550	1180
CVS 200-40	1519	1140	2659	645	550	1180

Performance curve

ISO9906 Annex A 3500rpm

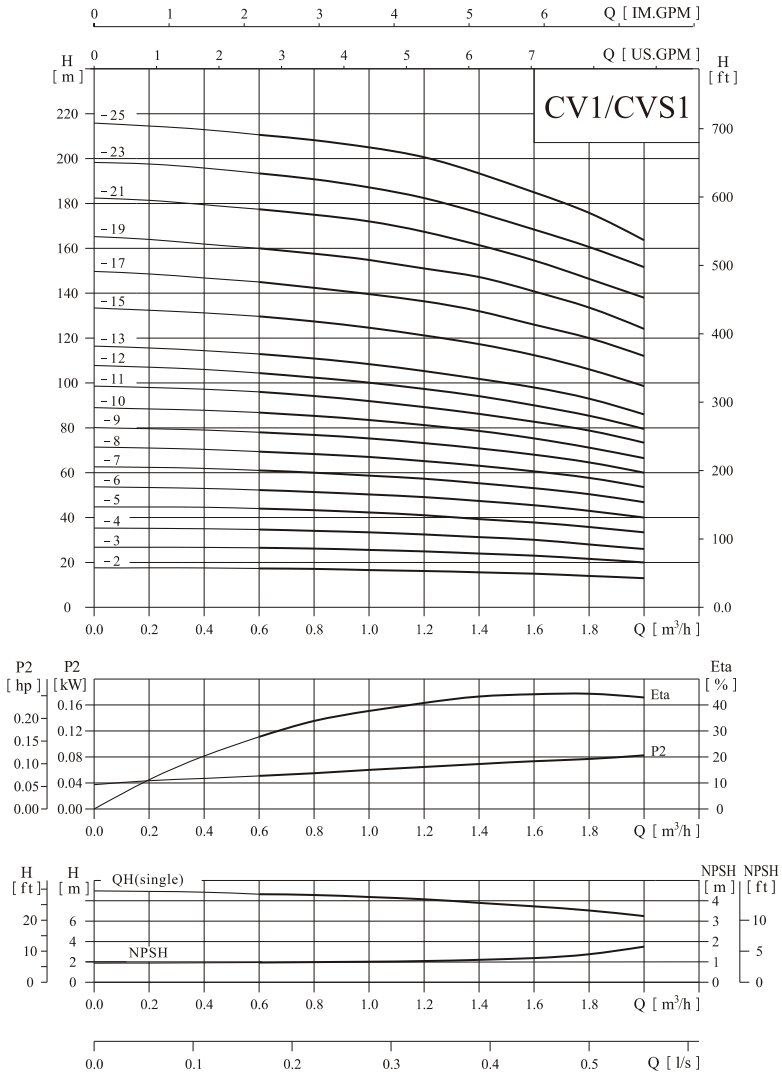

Installation sketch

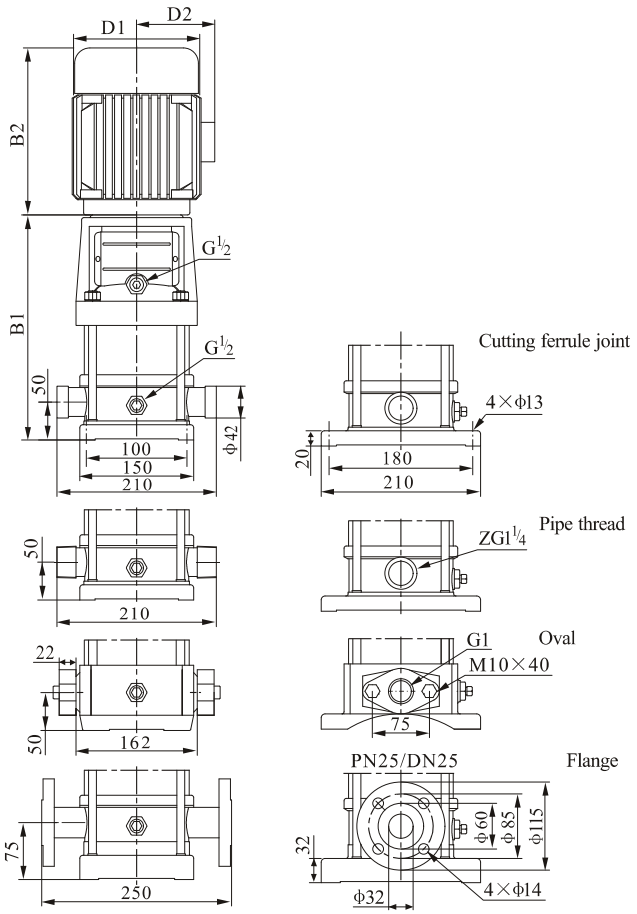

CVS1-19 ~ 1-25 sub-connection of pipeline has no oval flange connection. The overall dimensions of the single-phase motor and explosion-proof motor are a little different. Pls contact us for details.

Performance table

Model	Driving motor (kW)	Driving motor (hp)	Q (m³/h)	0.6	0.8	1	1.2	1.4	1.6	1.8	2
CVS 1-2	0.37	0.5	H (m)	17.5	17	16.5	16	15.5	15	14	13
CVS 1-3	0.37	0.5		26.5	26	25	24	23	22	21	20
CVS 1-4	0.37	0.5		35	34	33	32	31	30	28	26
CVS 1-5	0.55	0.75		43	42	41	40	39	38	35	33
CVS 1-6	0.55	0.75		52	51	50	48	47	45	43	39
CVS 1-7	0.75	1		60	59	58	56	55	52	50	46
CVS 1-8	0.75	1		68	67	65	64	62	59	57	53
CVS 1-9	0.75	1		76	75	74	73	71	66	64	60
CVS 1-10	1.1	1.5		85	84	83	81	78	74	72	67
CVS 1-11	1.1	1.5		95	93	90	87	85	81	78	73
CVS 1-12	1.1	1.5		103	102	98	96	92	88	86	79
CVS 1-13	1.1	1.5		112	110	107	105	100	95	93	86
CVS 1-15	1.5	2		127	125	123	121	117	112	107	99
CVS 1-17	1.5	2		144	141	139	137	132	124	120	112
CVS 1-19	2.2	3		160	157	155	153	147	141	134	124
CVS 1-21	2.2	3		177	174	172	168	162	153	147	138
CVS 1-23	2.2	3		193	190	188	184	174	167	161	152
CVS 1-25	3	4		210	207	205	202	192	184	176	164

Size and weight

Model	Size (mm) B1	B2	B1+B2	D1	D2	Weight (kg)
CVS 1-2	258	210	468	148	117	20
CVS 1-3	276	210	486	148	117	20
CVS 1-4	294	210	504	148	117	21
CVS 1-5	312	210	522	148	117	22
CVS 1-6	330	210	540	148	117	23
CVS 1-7	358	245	603	170	142	26
CVS 1-8	376	245	621	170	142	27
CVS 1-9	394	245	639	170	142	28
CVS 1-10	412	245	657	170	142	29
CVS 1-11	430	245	675	170	142	29
CVS 1-12	448	245	693	170	142	30
CVS 1-13	466	245	711	170	142	31
CVS 1-15	512	290	802	190	155	37
CVS 1-17	548	290	838	190	155	38
CVS 1-19	584	290	874	190	155	41
CVS 1-21	620	290	910	190	155	42
CVS 1-23	656	290	946	190	155	43
CVS 1-25	702	315	1017	197	165	51

Performance curve

ISO9906 Annex A 3500rpm

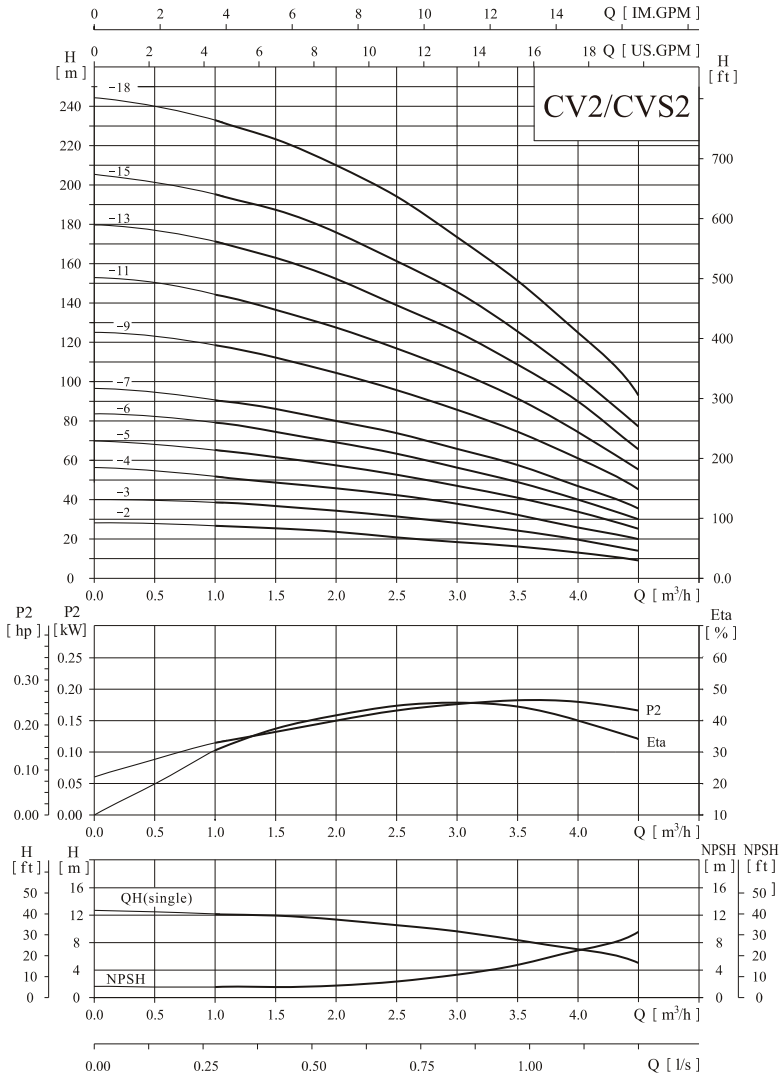

Installation sketch

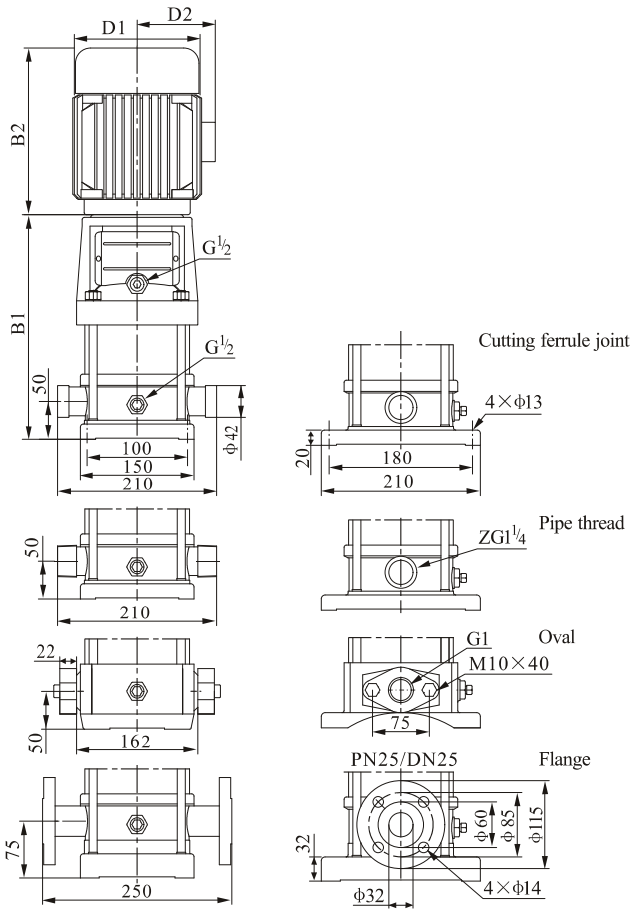

CVS 2-13 ~ 2-18 sub-connection of pipeline has no oval flange connection. The overall dimensions of the single-phase motor and explosion-proof motor are a little different. Pls contact us for details.

Performance table

Model	Driving motor (kW)	Driving motor (hp)	Q (m³/h)	1	1.5	2	2.5	3	3.5	4	4.5
CVS 2-2	0.55	0.75	H (m)	26	24	22	21	18	16	12	9
CVS 2-3	0.75	1		39	36	33	31	27	24	19	15
CVS 2-4	1.1	1.5		52	48	45	42	36	32	26	20
CVS 2-5	1.1	1.5		65	60	57	52	46	41	32	25
CVS 2-6	1.1	1.5		78	74	69	63	56	49	40	30
CVS 2-7	1.5	2		91	86	81	74	66	57	47	35
CVS 2-9	2.2	3		117	111	104	95	86	75	61	45
CVS 2-11	2.2	3		143	136	128	116	104	90	75	56
CVS 2-13	3	4		171	163	152	139	126	108	90	66
CVS 2-15	3	4		195	186	176	160	142	125	103	77
CVS 2-18	4	5.5		234	228	212	195	171	151	126	94

Size and weight

Model	Size (mm) B1	B2	B1+B2	D1	D2	Weight (kg)
CVS 2-2	258	210	468	148	117	21
CVS 2-3	286	245	531	170	142	24
CVS 2-4	304	245	549	170	142	25
CVS 2-5	322	245	567	170	142	26
CVS 2-6	340	245	585	170	142	26
CVS 2-7	368	290	658	190	155	32
CVS 2-9	404	290	694	190	155	36
CVS 2-11	440	290	730	190	155	37
CVS 2-13	486	315	801	197	165	44
CVS 2-15	522	315	837	197	165	45
CVS 2-18	576	335	911	230	188	54

Performance curve

ISO9906 Annex A 3500rpm

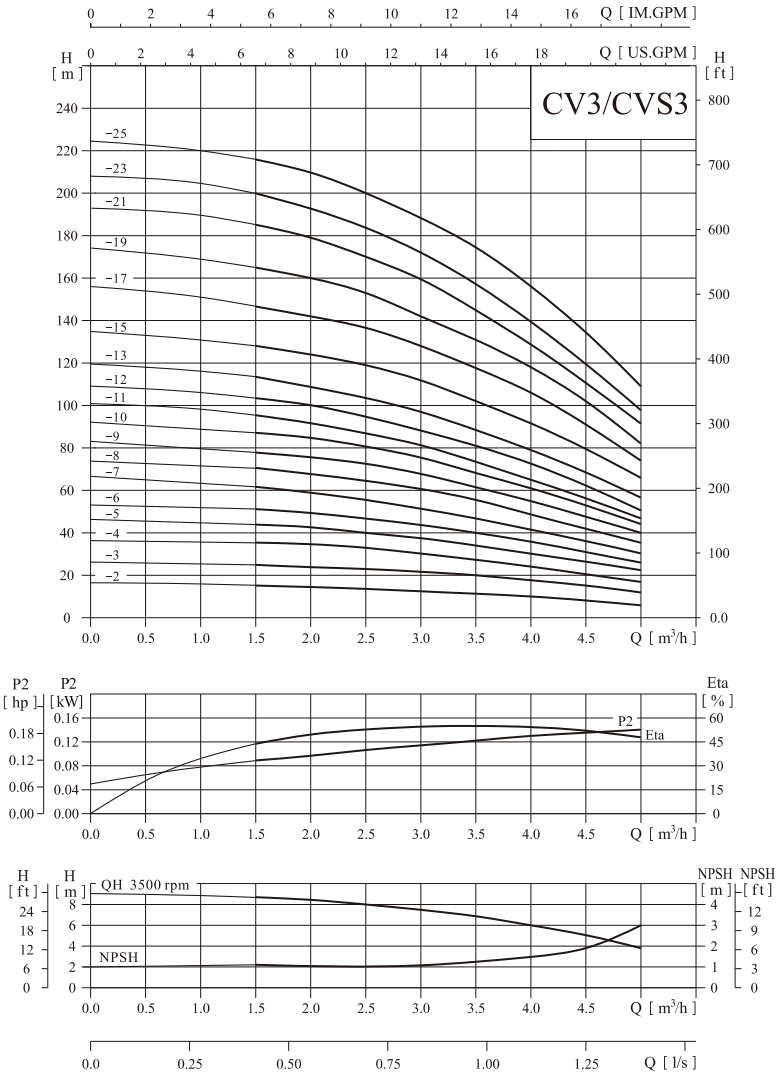

Installation sketch

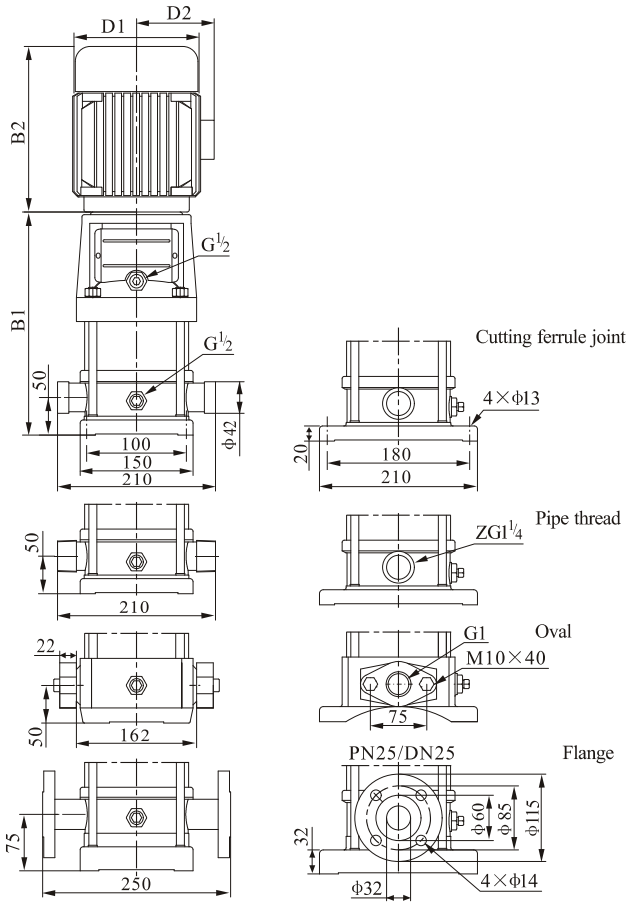

CVS3-17 ~ 3-25 sub-connection of pipeline has no oval flange connection. The overall dimensions of the single-phase motor and explosion-proof motor are a little different. Pls contact us for details.

Performance table

Model	Driving motor (kW)	Driving motor (hp)	Q (m³/h)	1.5	2	2.5	3	3.5	4	4.5	5
CVS3-2	0.37	0.5	H (m)	17.5	16	15	14	13	11	9	8
CVS3-3	0.55	0.75		26.5	25	24	23	20	18	15	12
CVS3-4	0.55	0.75		35	34	32	30	27	25	20	17
CVS3-5	0.75	1		44	42	40	38	33	31	26	23
CVS3-6	1.1	1.5		51	50	48	45	40	37	32	27
CVS3-7	1.1	1.5		61	59	56	52	46	43	38	31
CVS3-8	1.1	1.5		70	67	64	61	53	49	44	35
CVS3-9	1.5	2		78	77	72	68	60	56	50	40
CVS3-10	1.5	2		87	84	81	76	68	63	55	44
CVS3-11	1.5	2		96	92	87	82	74	69	59	48
CVS3-12	2.2	3		104	100	96	90	79	73	63	52
CVS3-13	2.2	3		112	109	104	98	86	80	69	57
CVS3-15	2.2	3		129	126	120	112	99	93	81	65
CVS3-17	2.2	3		147	143	137	128	114	106	91	74
CVS3-19	3	4		165	160	153	142	126	118	102	82
CVS3-21	3	4		183	178	170	160	141	129	112	91
CVS3-23	3	4		200	194	185	174	154	142	122	98
CVS3-25	4	5.5		217	211	202	187	167	154	134	108

Size and weight

Model	Size (mm) B1	B2	B1+B2	D1	D2	Weight (kg)
CVS3-2	258	210	468	148	117	20
CVS3-3	276	210	486	148	117	21
CVS3-4	294	210	504	148	117	22
CVS3-5	322	245	567	170	142	25
CVS3-6	340	245	585	170	142	26
CVS3-7	358	245	603	170	142	27
CVS3-8	376	245	621	170	142	27
CVS3-9	404	290	694	190	155	33
CVS3-10	422	290	712	190	155	34
CVS3-11	440	290	730	190	155	34
CVS3-12	458	290	748	190	155	37
CVS3-13	476	290	766	190	155	38
CVS3-15	512	290	802	190	155	39
CVS3-17	548	290	838	190	155	40
CVS3-19	594	315	909	197	165	48
CVS3-21	630	315	945	197	165	49
CVS3-23	666	315	981	197	165	50
CVS3-25	702	335	1037	230	188	58

Performance curve

ISO9906 Annex A 3500rpm

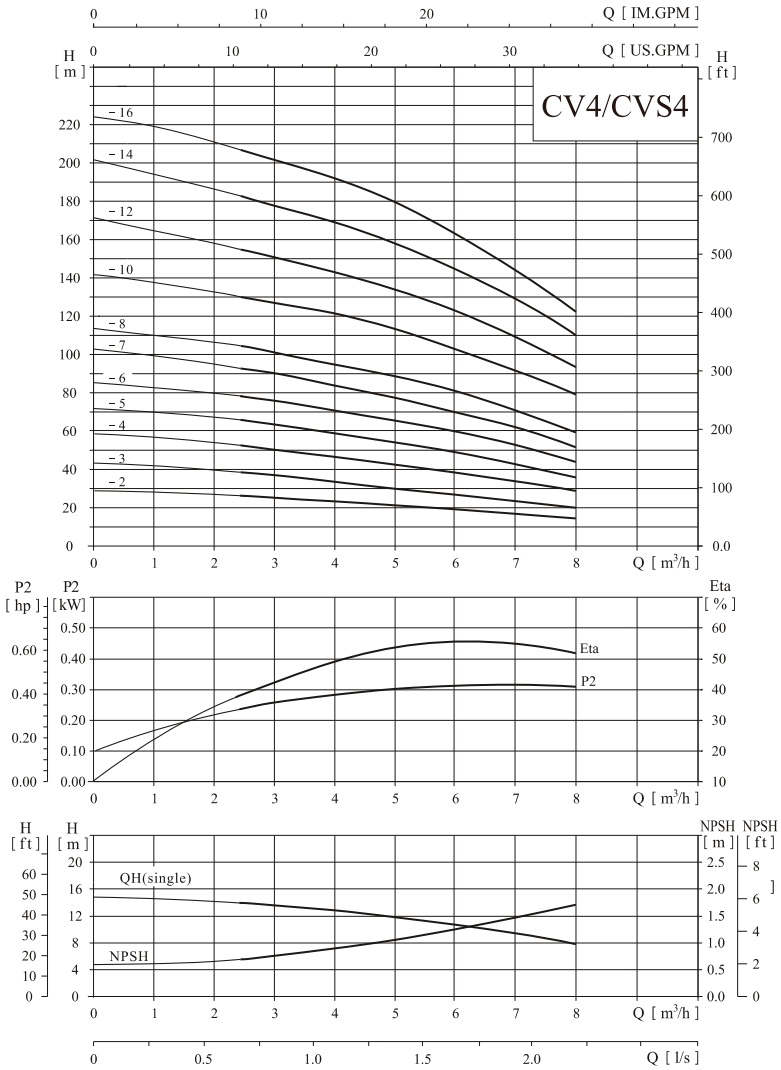

Installation sketch

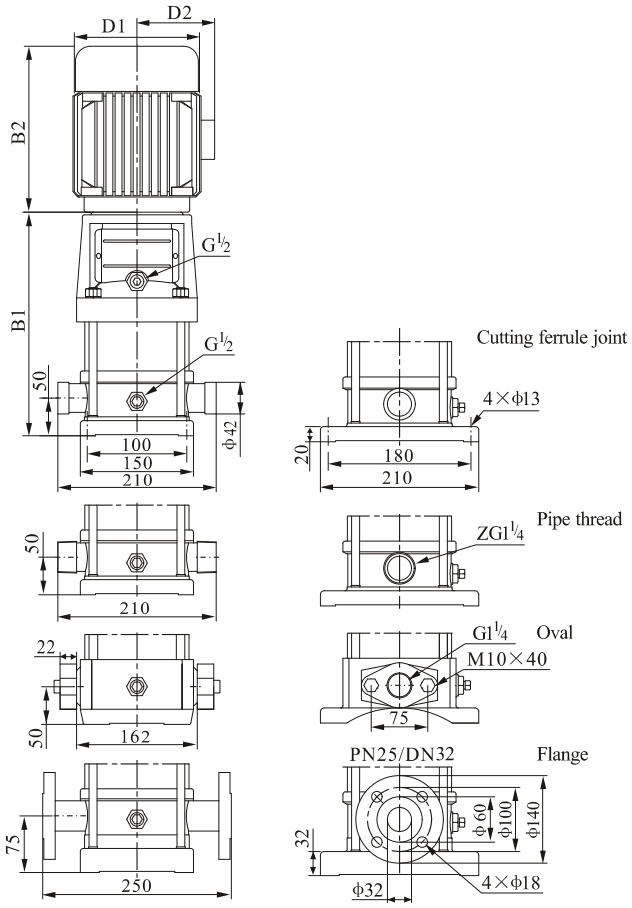

CVS 4-12 ~ 4-16 sub-connection of pipeline has no oval flange connection. The overall dimensions of the single-phase motor and explosion-proof motor are a little different. Pls contact us for details.

Performance table

Model	Driving motor (kW)	Driving motor (hp)	Q (m³/h)	2.5	3	4	5	6	7	8
CVS4-2	0.75	1	H (m)	26	25	23	21	19	16	14
CVS4-3	1.1	1.5		39	38	36	32	28	24	21
CVS4-4	1.5	2		52	50	48	44	38	35	31
CVS4-5	2.2	3		65	62	60	55	49	44	39
CVS4-6	2.2	3		78	75	72	67	59	54	47
CVS4-7	3	4		92	88	84	78	69	62	55
CVS4-8	3	4		104	100	95	90	79	72	63
CVS4-10	4	5.5		130	125	120	113	102	90	80
CVS4-12	4	5.5		156	150	145	136	122	109	96
CVS4-14	5.5	7.5		182	176	170	159	145	129	112
CVS4-16	5.5	7.5		207	201	196	183	165	146	128

Size and weight

Model	Size (mm) B1	B2	B1+B2	D1	D2	Weight (kg)
CVS4-2	286	245	531	170	142	24
CVS4-3	313	245	558	170	142	25
CVS4-4	350	290	640	190	155	31
CVS4-5	376	290	667	190	155	34
CVS4-6	404	290	694	190	155	35
CVS4-7	441	315	756	197	165	42
CVS4-8	468	315	783	197	165	42
CVS4-10	522	335	857	230	188	51
CVS4-12	576	335	911	230	188	52
CVS4-14	650	430	1080	260	208	64
CVS4-16	704	430	1134	260	208	66

Performance curve

ISO9906 Annex A 3500rpm

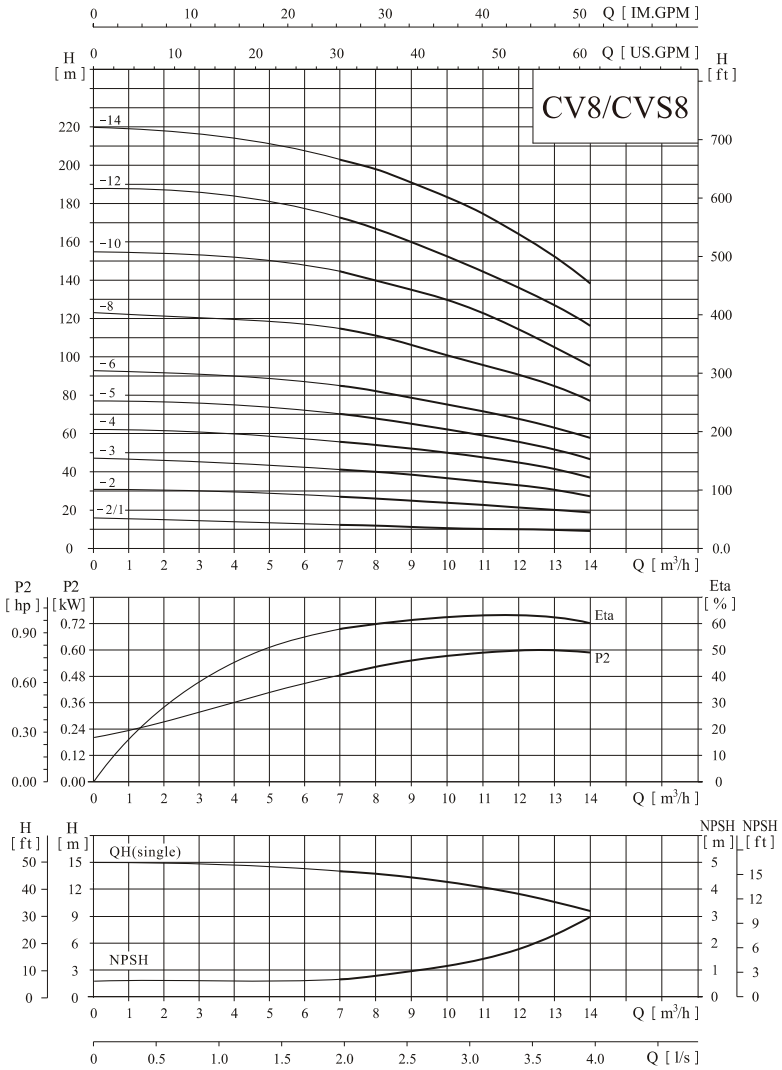

Installation sketch

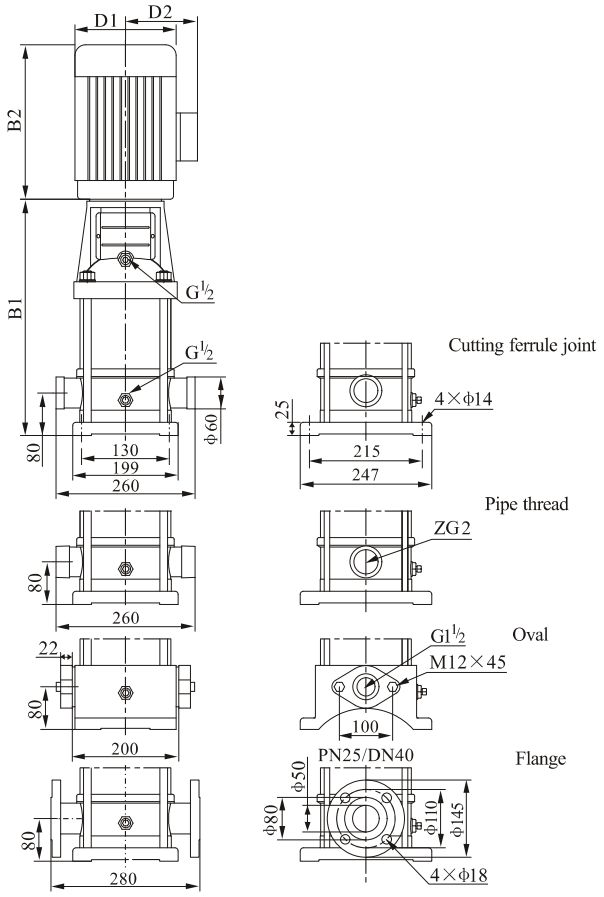

CVS8-10 ~ 8-14 sub-connection of pipeline has no oval flange connection. The overall dimensions of the single-phase motor and explosion-proof motor are a little different. Pls contact us for details.

Performance table

Model	Driving motor (kW)	Driving motor (hp)	Q (m³/h)	7	8	9	10	11	12	13	14
CVS 8-2/1	0.75	1	H (m)	13	12	11.5	11	10.5	10	9.5	9
CVS 8-2	1.5	2		27	26	25	24	23	22	20	18
CVS 8-3	2.2	3		41	40	38	37	35	33	30	28
CVS 8-4	3	4		55	54	52	50	47	45	41	38
CVS 8-5	3	4		70	68	65	63	59	56	52	47
CVS 8-6	4	5.5		85	82	78	76	72	68	62	57
CVS 8-8	5.5	7.5		115	110	105	101	97	91	84	75
CVS 8-10	7.5	10		145	140	132	126	122	115	105	95
CVS 8-12	7.5	10		173	167	160	152	147	132	125	115
CVS 8-14	11	15		202	195	188	179	174	163	147	135

Size and weight

Model	Size (mm) B1	B2	B1+B2	D1	D2	Weight (kg)
CVS 8-2/1	347	245	592	170	142	32
CVS 8-2	357	290	647	190	155	38
CVS 8-3	387	290	677	190	155	41
CVS 8-4	427	315	742	197	165	49
CVS 8-5	457	315	772	197	165	50
CVS 8-6	487	335	822	230	188	58
CVS 8-8	567	430	997	260	208	71
CVS 8-10	627	430	1057	260	208	80
CVS 8-12	687	430	1117	260	208	82
CVS 8-14	835	490	1325	330	255	153

Performance curve

ISO9906 Annex A 3500rpm

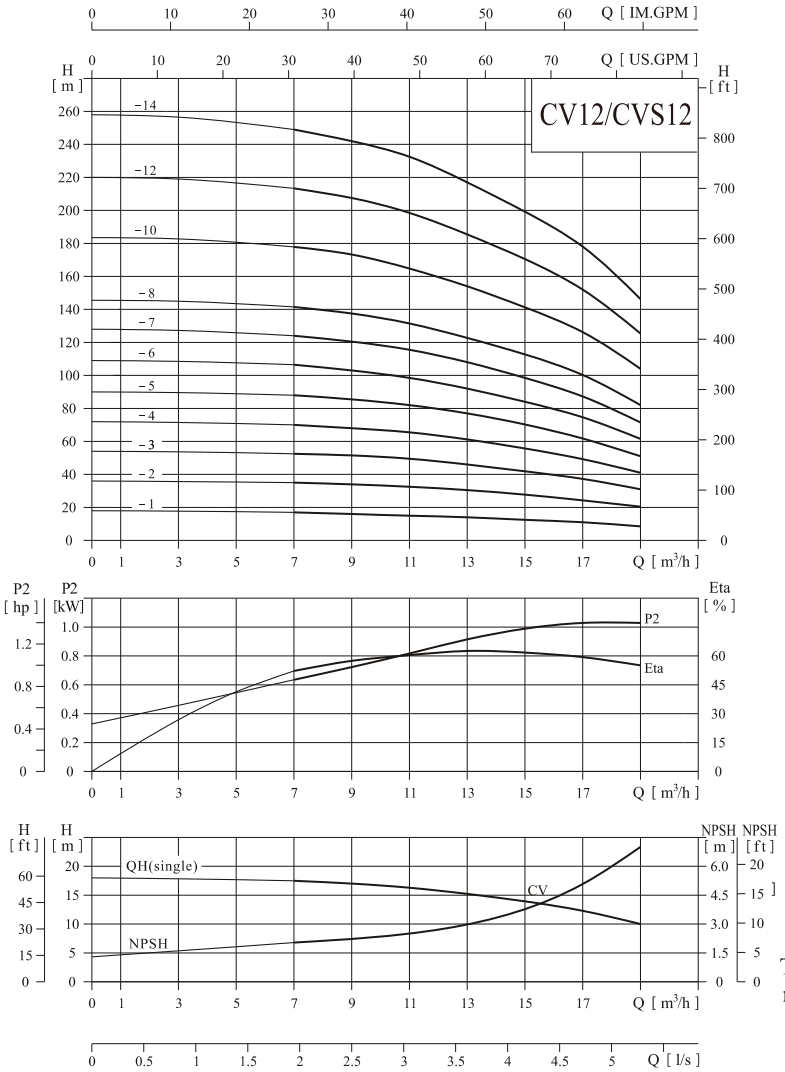

Installation sketch

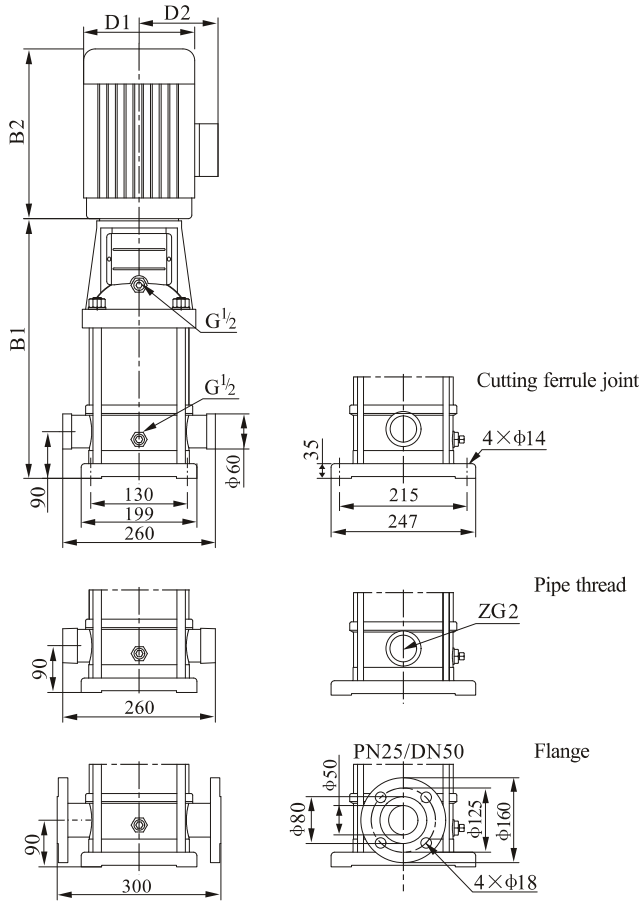

The overall dimensions of the single-phase motor and explosion-proof motor are a little different. Pls contact us for details.

Performance table

Model	Driving motor (kW)	Driving motor (hp)	Q (m³/h)	7	9	11	12	13	15	17	19
CVS12-1	1.1	1.5	H (m)	17	16	15	14.5	14	12.5	11	8.5
CVS12-2	2.2	3		35	34	32.5	32	30.5	27	24.5	20.5
CVS12-3	4	5.5		52.5	51.5	50	48	46	41.5	37.5	31
CVS12-4	5.5	7.5		70	68	65.5	64	61.5	55	49.5	41
CVS12-5	5.5	7.5		88	86	82	80	77	70	62	51
CVS12-6	7.5	10		107	103	99	96	92	84	75	61
CVS12-7	7.5	10		124	121	116	112	107	97	88	71
CVS12-8	11	15		141	137	132	128	122	111	101	82
CVS12-10	11	15		178	173	166	161	153	140	128	104
CVS12-12	15	20		213	208	199	193	185	169	154	125
CVS12-14	15	20		249	242	233	225	216	198	180	145

Size and weight

Model	Size (mm) B1	B2	B1+B2	D1	D2	Weight (kg)
CVS 12-1	357	245	602	170	142	32
CVS 12-2	367	290	657	190	155	41
CVS 12-3	407	335	742	230	188	56
CVS 12-4	457	430	887	260	208	69
CVS 12-5	487	430	917	260	208	71
CVS 12-6	517	430	947	260	208	77
CVS 12-7	547	430	977	260	208	78
CVS 12-8	665	490	1155	330	255	147
CVS 12-10	725	490	1215	330	255	151
CVS 12-12	785	490	1275	330	255	164
CVS 12-14	845	490	1335	330	255	167

Performance curve

ISO9906 Annex A 3500rpm

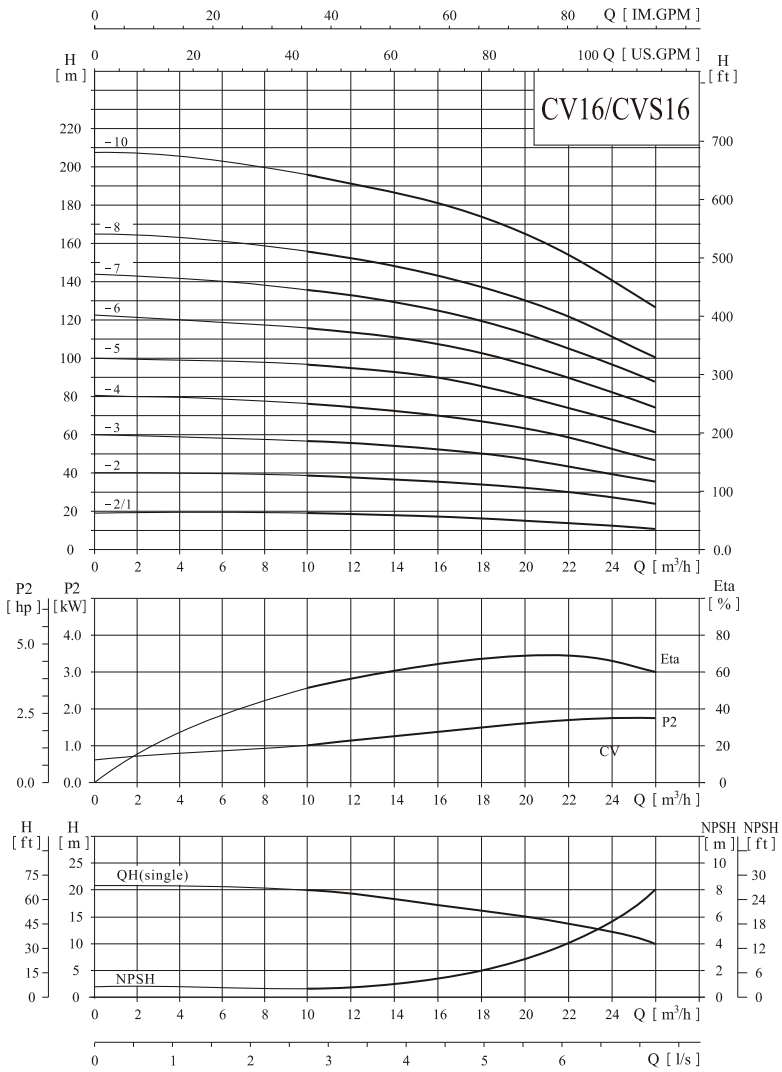

Installation sketch

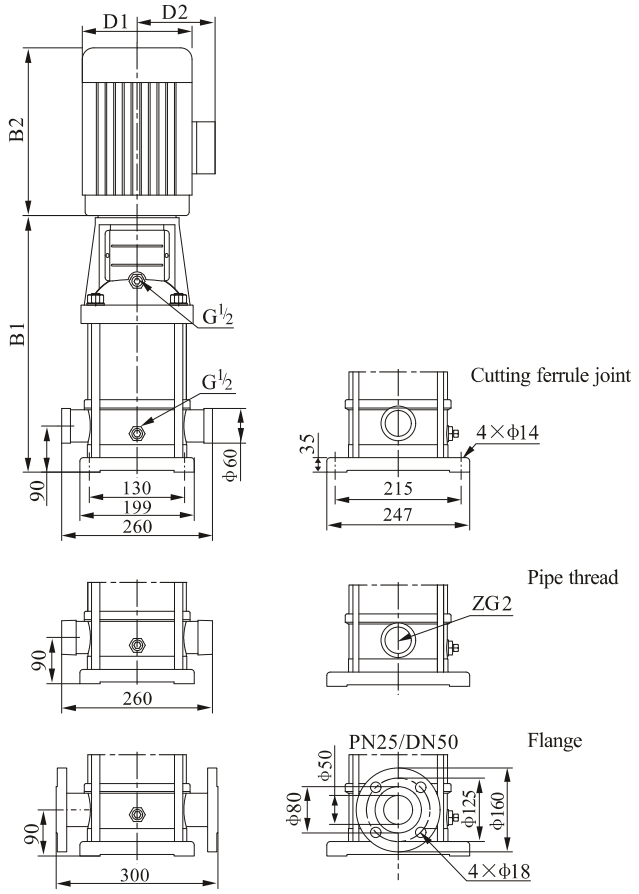

The overall dimensions of the single-phase motor and explosion-proof motor are a little different. Pls contact us for details.

Performance table

Model	Driving motor (kW)	Driving motor (hp)	Q (m³/h)	10	12	14	16	18	20	22	24	26
CVS16-2/1	2.2	3	H (m)	19	18.5	18	17	16	15	14	13	11
CVS 16-2	4	5.5		38	37	36	35	34	32	30	27	24
CVS 16-3	5.5	7.5		57	56	55	54	51	48	45	40	36
CVS 16-4	7.5	10		76	75	73	72	68	64	60	54	49
CVS 16-5	11	15		96	94	92	90	85	80	75	68	62
CVS 16-6	11	15		115	113	111	108	102	96	91	82	75
CVS 16-7	15	20		135	132	129	126	119	113	106	96	88
CVS 16-8	15	20		155	152	148	144	137	130	122	111	101
CVS 16-10	18.5	25		197	192	187	181	174	165	153	139	127

Size and weight

Model	Size (mm) B1	B2	B1+B2	D1	D2	Weight (kg)
CVS 16-2/1	397	290	687	190	155	42
CVS 16-2	407	335	742	230	188	56
CVS 16-3	472	430	902	260	208	68
CVS 16-4	517	430	947	260	208	75
CVS 16-5	650	490	1140	330	255	148
CVS 16-6	695	490	1185	330	255	150
CVS 16-7	740	490	1230	330	255	161
CVS 16-8	785	490	1275	330	255	163
CVS 16-10	875	550	1425	330	255	186

Performance curve

ISO9906 Annex A 3500rpm

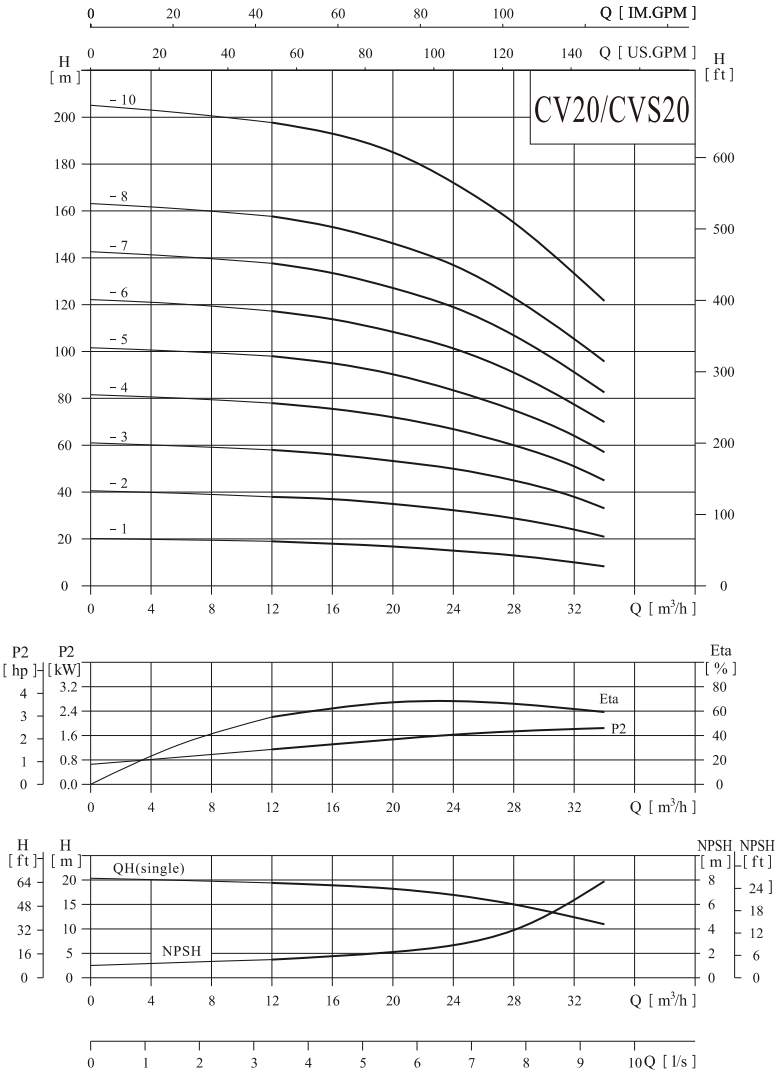

Installation sketch

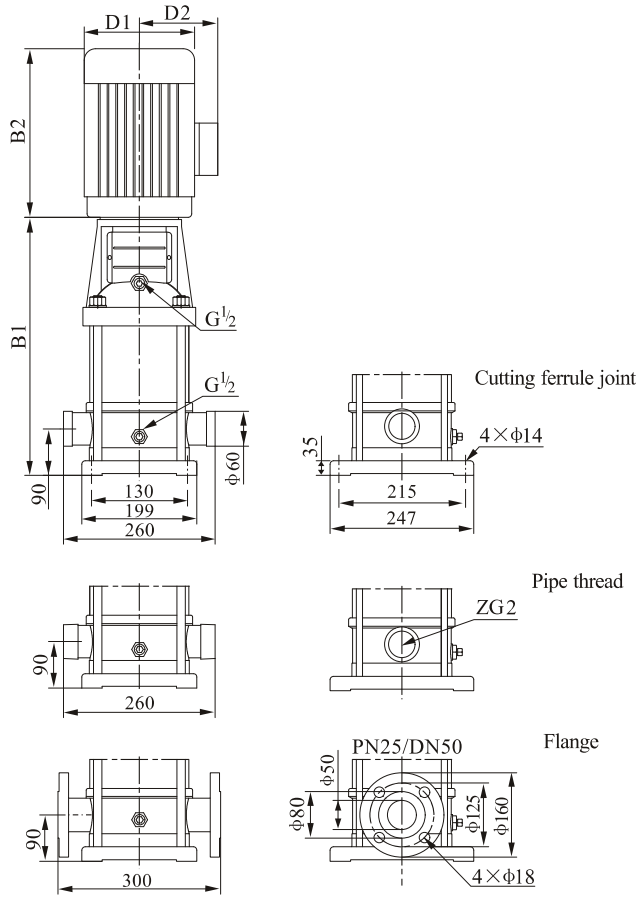

The overall dimensions of the single-phase motor and explosion-proof motor are a little different. Pls contact us for details.

Performance table

Model	Driving motor (kW)	Driving motor (hp)	Q (m³/h)	12	16	20	24	28	32	34
CVS 20-1	2.2	3	H (m)	19	18	17	15	13	10	8.5
CVS 20-2	4.0	5.5		38	37	35	32	29	24	21
CVS 20-3	5.5	7.5		58	56	53	50	45	38	33
CVS 20-4	7.5	10		78	75	72	67	60	51	45
CVS 20-5	11	15		98	94	90	85	75	64	57
CVS 20-6	11	15		118	113	108	102	91	77	70
CVS 20-7	15	20		138	133	127	119	107	91	83
CVS 20-8	15	20		158	153	146	137	123	105	96
CVS 20-10	18.5	25		198	193	185	172	155	133	122

Size and weight

Model	Size (mm) B1	B2	B1+B2	D1	D2	Weight (kg)
CVS 20-1	397	290	687	190	155	41
CVS 20-2	407	335	742	230	188	56
CVS 20-3	472	430	902	260	208	69
CVS 20-4	517	430	947	260	208	79
CVS 20-5	650	490	1140	330	255	148
CVS 20-6	695	490	1185	330	255	150
CVS 20-7	740	490	1230	330	255	162
CVS 20-8	785	490	1275	330	255	163
CVS 20-10	875	550	1425	330	255	187

Performance curve

ISO9906 Annex A 3500rpm

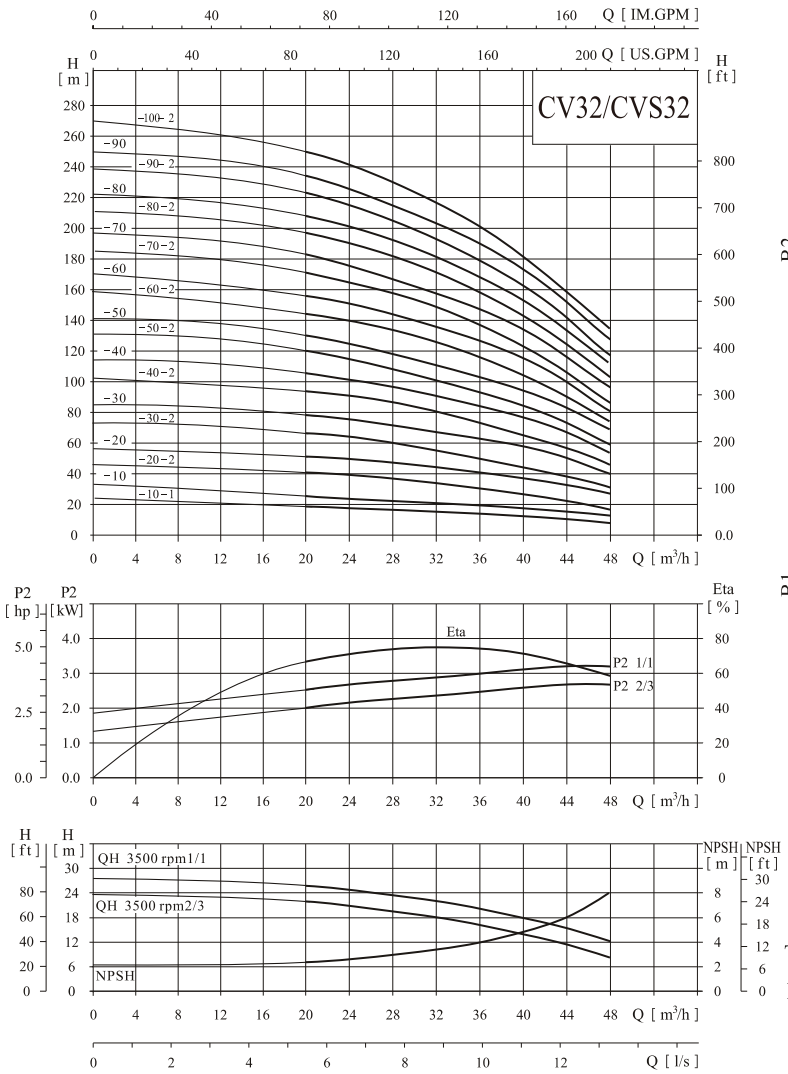

Installation sketch

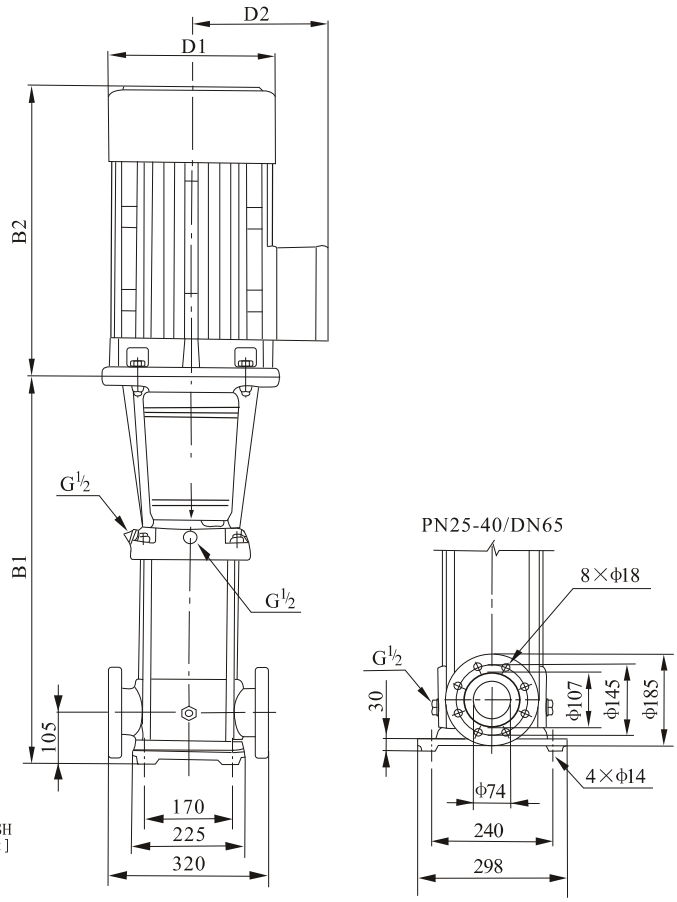

The overall dimensions of explosion-proof motor is a little different. Pls contact us for details.

Performance table

Model	Driving motor (kW)	Driving motor (hp)	Q (m³/h)	20	24	28	32	36	40	44	48
CVS 32-10-1	3.0	4	H (m)	20	19	18	17	15	13	10	7
CVS 32-10	4.0	5.5		26	25	24	23	21	19	17	14
CVS 32-20-2	5.5	7.5		41	40	38	35	31	27	22	17
CVS 32-20	7.5	10		52	50	48	45	41	37	33	27
CVS 32-30-2	7.5	10		67	64	61	57	52	46	39	31
CVS 32-30	11	15		78	75	71	67	62	56	50	40
CVS 32-40-2	11	15		94	91	87	81	73	65	56	45
CVS 32-40	15	20		104	101	96	91	83	75	66	55
CVS 32-50-2	15	20		119	115	109	102	94	84	73	59
CVS 32-50	18.5	25		130	125	119	112	104	94	83	69
CVS 32-60-2	18.5	25		145	140	134	126	116	104	90	74
CVS 32-60	18.5	25		155	150	144	136	126	114	100	81
CVS 32-70-2	22	30		172	166	158	149	137	123	106	86
CVS 32-70	22	30		182	176	168	159	148	133	118	97
CVS 32-80-2	22	30		196	190	182	172	159	143	124	102
CVS 32-80	30	40		208	201	192	181	167	152	132	111
CVS 32-90-2	30	40		223	216	206	194	179	162	142	117
CVS 32-90	30	40		234	226	216	204	189	172	152	127
CVS 32-100-2	30	40		248	241	231	217	201	181	159	133

Size and weight

Model	Size (mm) B1	B2	B1+B2	D1	D2	Weight (kg)
CVS 32-10-1	505	315	820	197	165	73
CVS 32-10	505	335	840	230	188	81
CVS 32-20-2	575	430	1005	260	208	95
CVS 32-20	575	430	1005	260	208	101
CVS 32-30-2	645	490	1135	330	255	104
CVS 32-30	750	490	1240	330	255	172
CVS 32-40-2	820	490	1310	330	255	176
CVS 32-40	820	490	1310	330	255	186
CVS 32-50-2	890	490	1380	330	255	191
CVS 32-50	890	550	1440	330	255	211
CVS 32-60-2	960	550	1510	330	255	216
CVS 32-60	960	550	1510	330	255	216
CVS 32-70-2	1030	590	1620	360	285	255
CVS 32-70	1030	590	1620	360	285	255
CVS 32-80-2	1100	590	1690	400	310	259
CVS 32-80	1100	660	1760	400	310	315
CVS 32-90-2	1170	660	1830	400	310	319
CVS 32-90	1170	660	1830	400	310	319
CVS 32-100-2	1240	660	1900	400	310	324

Performance curve

ISO9906 Annex A 3500rpm

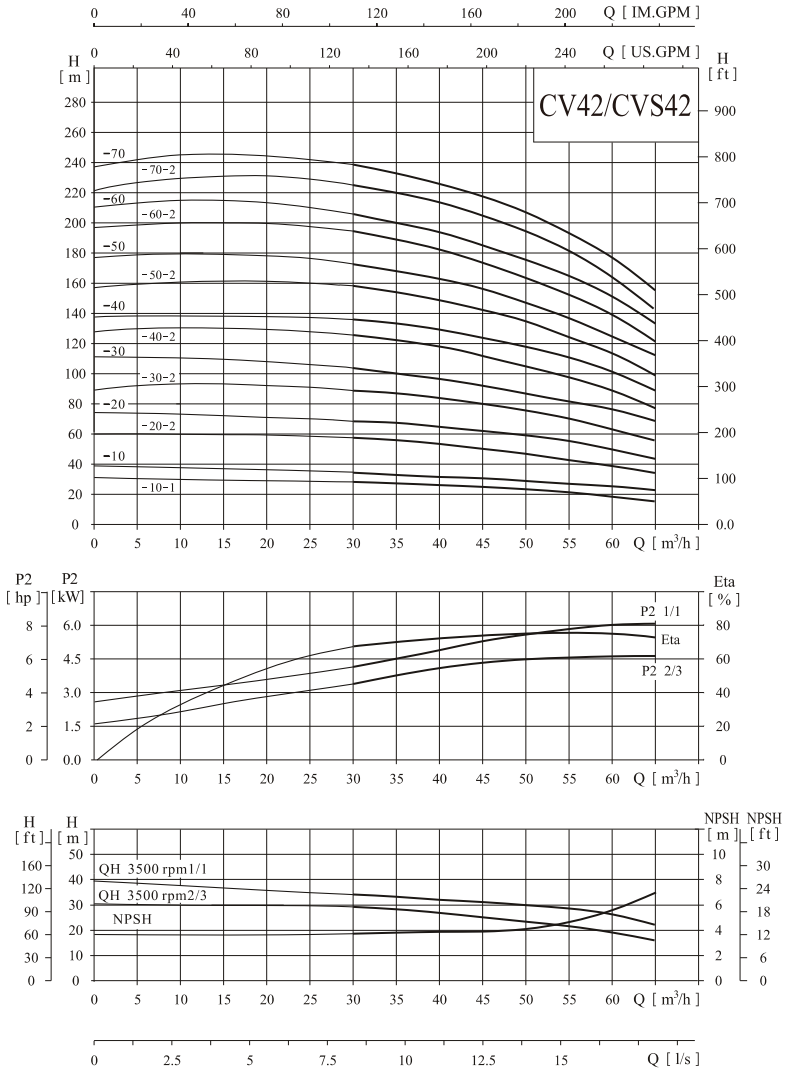

Installation sketch

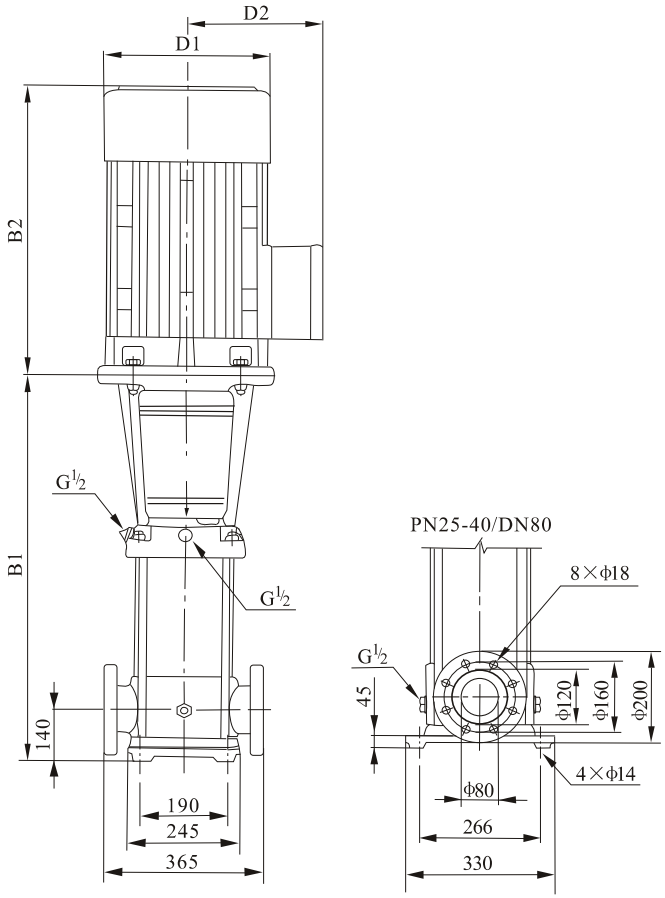

The overall dimensions of explosion proof motor is a little different
Pls contact us for details

Performance table

Model	Driving motor (kW)	Driving motor (hp)	Q (m³/h)	30	35	40	42	45	50	55	60	65
CVS 42-10-1	5.5	7.5	H (m)	29	28	27	26	25	23	21	19	16
CVS 42-10	7.5	10		34	33	32	31.5	30	29	27	25	22
CVS 42-20-2	11	15		57	55	53	52	49	46	43	38	33
CVS 42-20	15	20		69	67	65	63	61	59	55	50	44
CVS 42-30-2	18.5	25		90	88	85	83	80	75	72	63	55
CVS 42-30	18.5	25		102	100	97	95	92	88	82	76	68
CVS 42-40-2	22	30		125	121	118	115	112	105	98	89	78
CVS 42-40	30	40		136	133	129	126	123	117	112	102	89
CVS 42-50-2	30	40		159	154	149	146	142	134	121	115	99
CVS 42-50	30	40		171	166	161	158	154	145	138	126	112
CVS 42-60-2	37	50		194	188	182	178	173	163	155	139	122
CVS 42-60	37	50		205	200	193	190	186	176	166	152	134
CVS 42-70-2	45	60		227	220	213	210	205	193	182	165	144
CVS 42-70	45	60		239	232	226	221	216	204	194	178	157

Size and weight

Model	Size (mm) B1	B2	B1+B2	D1	D2	Weight (kg)
CVS 42-10-1	561	430	992	260	208	101
CVS 42-10	561	430	992	260	208	106
CVS 42-20-2	748	490	1238	330	255	178
CVS 42-20	748	490	1238	330	255	188
CVS 42-30-2	828	550	1378	330	255	213
CVS 42-30	828	550	1378	330	255	213
CVS 42-40-2	908	590	1498	360	285	253
CVS 42-40	908	660	1568	400	310	309
CVS 42-50-2	988	660	1648	400	310	313
CVS 42-50	988	660	1648	400	310	313
CVS 42-60-2	1068	660	1728	400	310	340
CVS 42-60	1068	660	1728	400	310	340
CVS 42-70-2	1148	700	1848	460	340	404
CVS 42-70	1148	700	1848	460	340	404

Performance curve

ISO9906 Annex A 3500rpm

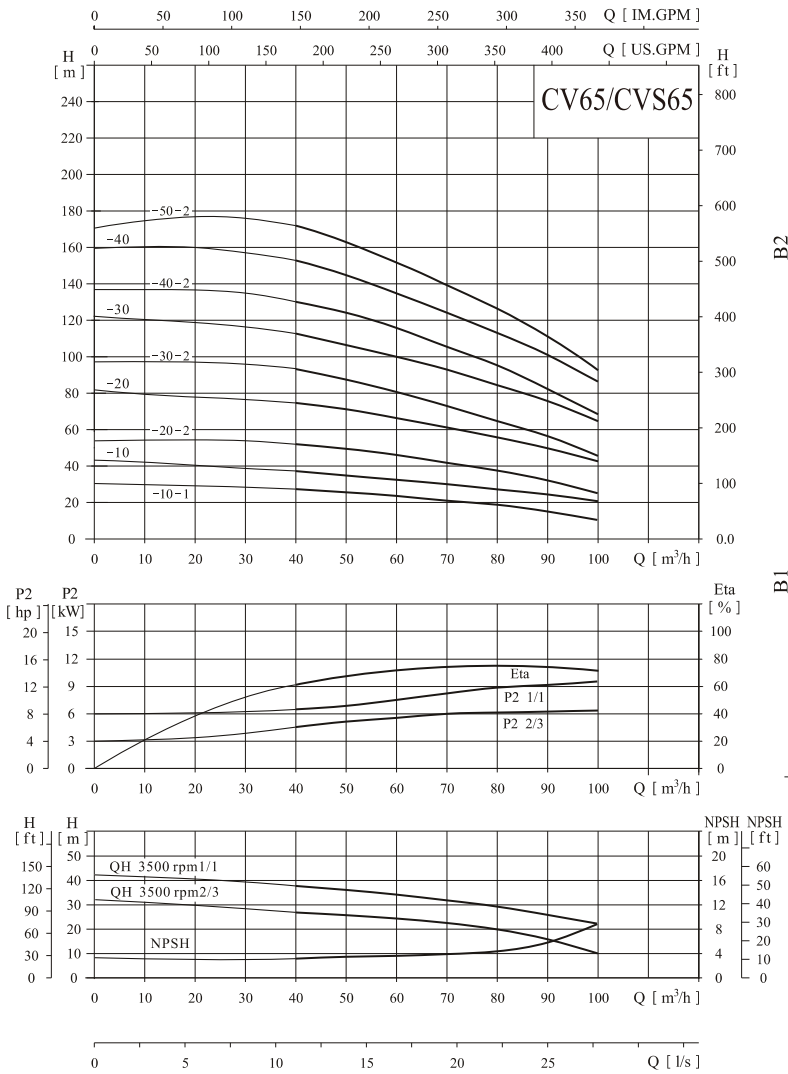

Installation sketch

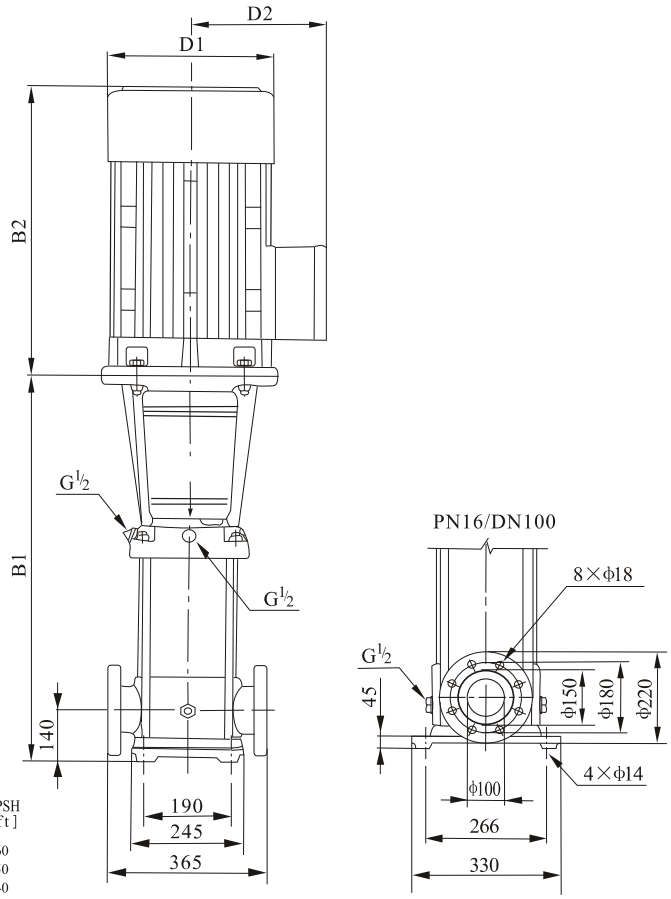

The overall dimensions of explosion-proof motor is a little different.
Pls contact us for details.
（For CV 65 series, PN25-40/DN100 standard flange is also available if required）

Performance table

Model	Driving motor (kW)	Driving motor (hp)	Q (m³/h)	40	50	60	65	70	80	90	100
CVS 65-10-1	7.5	10	H (m)	26	25	23	22	21	18	14	10
CVS 65-10	11	15		37	35	33	32	31	28	24	21
CVS 65-20-2	15	20		53	50	47	44	42	37	31	23
CVS 65-20	22	30		74	72	67	64	62	57	51	42
CVS 65-30-2	22	30		93	88	80	76	72	65	56	45
CVS 65-30	30	40		112	108	100	96	93	86	77	65
CVS 65-40-2	37	50		130	124	115	110	103	94	83	66
CVS 65-40	45	60		152	144	135	130	123	114	102	86
CVS 65-50-2	45	60		172	162	151	144	137	126	112	91

Size and weight

Model	Size (mm) B1	B2	B1+B2	D1	D2	Weight (kg)
CVS 65-10-1	561	430	991	260	208	109
CVS 65-10	671	490	1161	330	255	177
CVS 65-20-2	754	490	1244	330	255	187
CVS 65-20	754	590	1344	360	285	248
CVS 65-30-2	836	590	1426	360	285	252
CVS 65-30	836	660	1496	400	310	313
CVS 65-40-2	919	660	1579	400	310	336
CVS 65-40	919	700	1619	460	340	398
CVS 65-50-2	1001	700	1701	460	340	402

Performance curve

ISO9906 Annex A 3500rpm

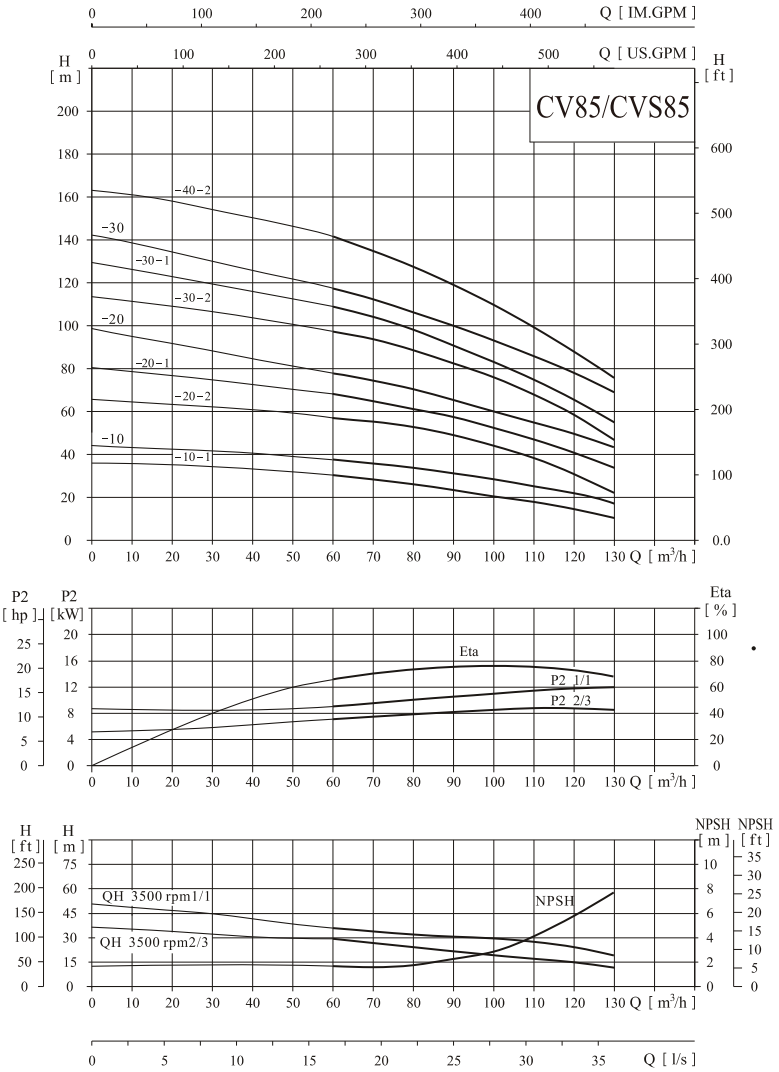

Installation sketch

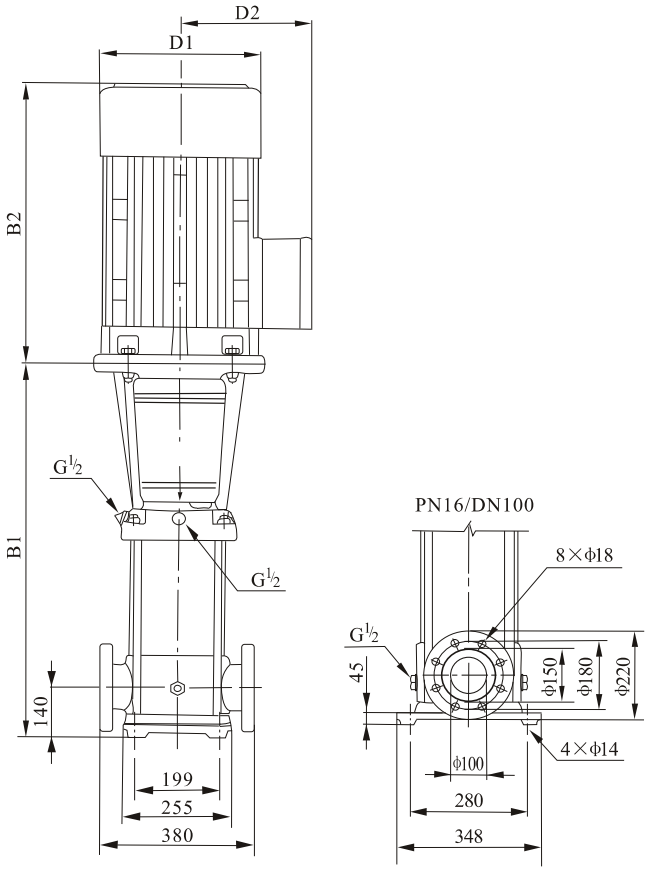

The overall dimensions of explosion-proof motor is a little different.
Pls contact us for details.
（For CV85 series, PN25-40/DN100 standard flange is also available if required）

Performance table

Model	Driving motor (kW)	Driving motor (hp)	Q (m³/h)	60	70	80	85	90	100	110	120	130
CVS 85-10-1	11	15	H (m)	31	27	25	24	23	21	18	14	9
CVS 85-10	15	20		36	35	33	31	30	29	26	23	18
CVS 85-20-2	18.5	25		59	57	54	51	48	44	39	32	22
CVS 85-20-1	22	30		67	65	62	59	57	51	47	41	33
CVS 85-20	30	40		76	73	69	66	64	60	56	52	44
CVS 85-30-2	37	50		98	94	88	85	82	75	69	59	46
CVS 85-30-1	37	50		108	104	98	94	90	83	78	69	56
CVS 85-30	45	60		116	111	105	102	97	93	88	79	69
CVS 85-40-2	45	60		141	135	128	124	118	109	102	89	72

Size and weight

Model	Size (mm) B1	B2	B1+B2	D1	D2	Weight (kg)
CVS85-10-1	571	490	1061	330	255	177
CVS85-10	571	490	1061	330	255	188
CVS85-20-2	773	550	1323	330	255	211
CVS85-20-1	773	590	1363	360	285	248
CVS85-20	773	660	1433	400	310	304
CVS85-30-2	865	660	1525	400	310	330
CVS85-30-1	865	660	1525	400	310	330
CVS85-30	865	700	1565	460	340	392
CVS85-40-2	957	700	1657	460	340	396

Performance curve

ISO9906 Annex A 3540rpm

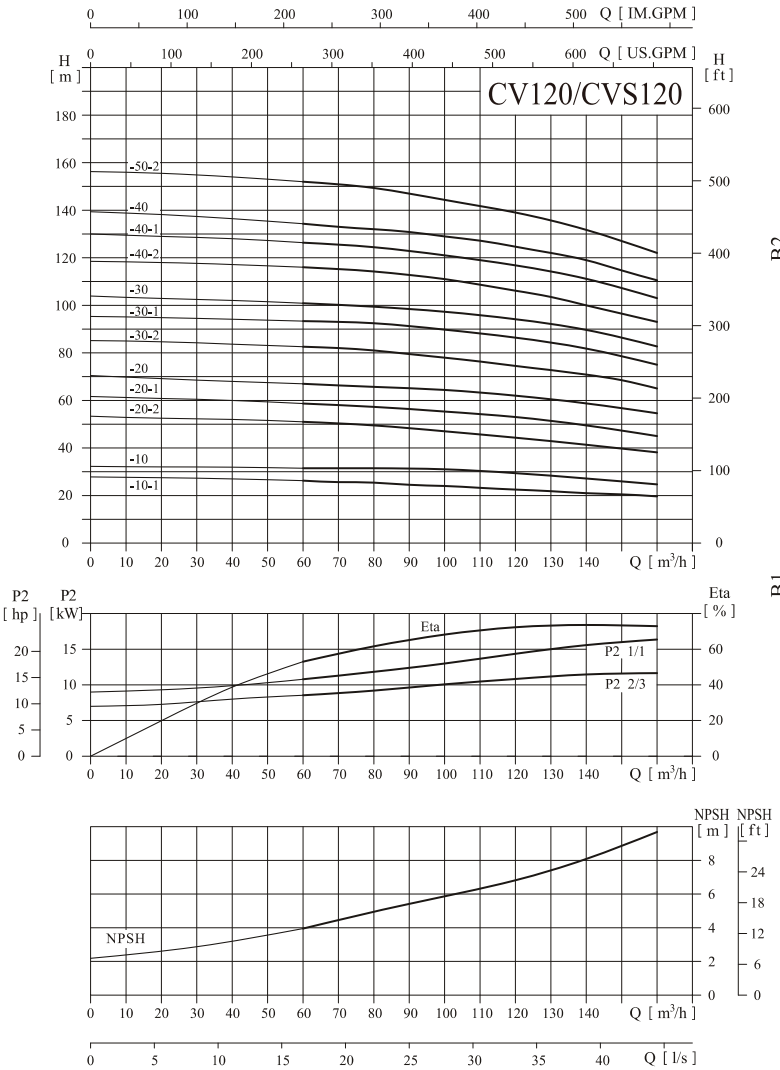

Installation sketch

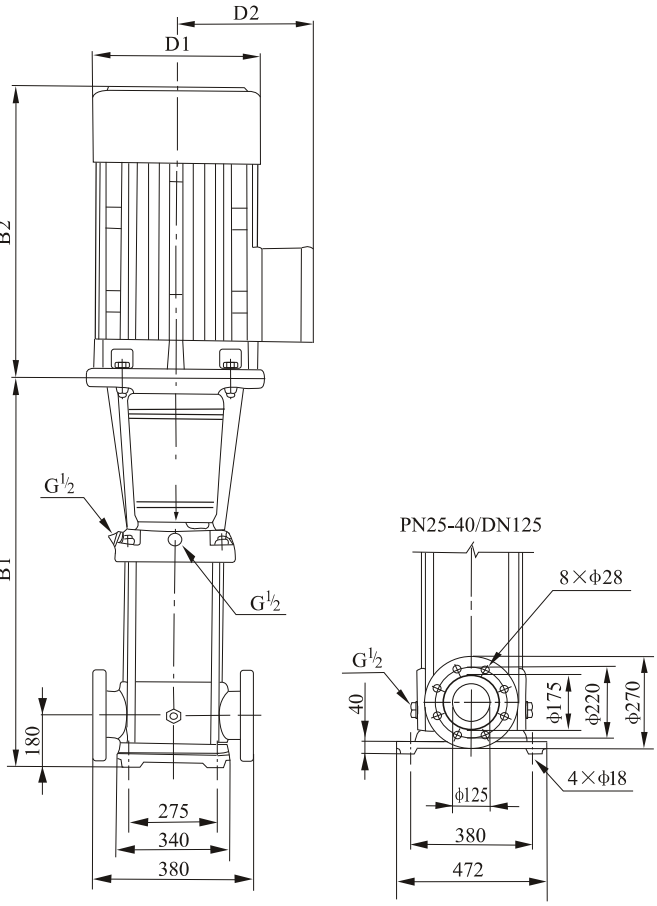

The overall dimensions of explosion proof motor is a little different
Pls contact us for details

Performance table

Model	Driving motor (kW)	Driving motor (hp)	Q (m³/h)	60	70	80	90	100	110	120	130	140	150	160
CVS120-10-1	15	20	H (m)	26.5	26	25	24.5	23.8	23	22.5	21.5	21.3	21	20
CVS120-10	18.5	25		30.8	30.7	30.7	30.5	30.3	29.5	28.8	27.6	26.4	25.4	24.4
CVS120-20-2	30	40		51.5	50.5	49.5	47.5	46	45.5	44.8	43	41	39.7	38.5
CVS120-20-1	30	40		58.3	58	57.3	56	54.7	54	53	51.5	50	47.4	45
CVS120-20	37	50		66.3	66	65.7	65	64.4	63	62	60.7	59.6	57	54.6
CVS120-30-2	45	60		83	82	81	79.5	78	76	74.5	73.5	71	68.5	65
CVS120-30-1	45	60		91.3	91	90.4	89	87.7	86	84.4	82	80	76.7	73.3
CVS120-30	55	75		100.3	100	99.4	98.3	97.3	95.5	94	92	90	86.3	82.7
CVS120-40-2	75	100		116	115.5	114	113	111	109	105.5	104	100	97	93
CVS120-40-1	75	100		126	125.4	124.6	122.6	120.6	118.5	116.5	114	111.3	107	103
CVS120-40	75	100		134	133	132	131	129.5	127.5	125	122	119	114.5	109.5
CVS120-50-2	75	100		152	151	149.7	147	144	141.5	139	135.5	132	127	122

Size and weight

Model	Size (mm) B1	B2	B1+B2	D1	D2	Weight (kg)
CVS120-10-1	840	490	1330	330	255	235
CVS120-10	840	550	1390	330	255	250
CVS120-20-2	1000	660	1660	400	310	350
CVS120-20-1	1000	660	1660	400	310	350
CVS120-20	1000	660	1660	400	310	380
CVS120-30-2	1160	700	1860	460	340	445
CVS120-30-1	1160	700	1860	460	340	445
CVS120-30	1190	770	1960	510	370	545
CVS120-40-2	1350	845	2195	580	410	675
CVS120-40-1	1350	845	2195	580	410	675
CVS120-40	1350	845	2195	580	410	675
CVS120-50-2	1510	845	2355	580	410	690

Performance curve

ISO9906 Annex A 3540rpm

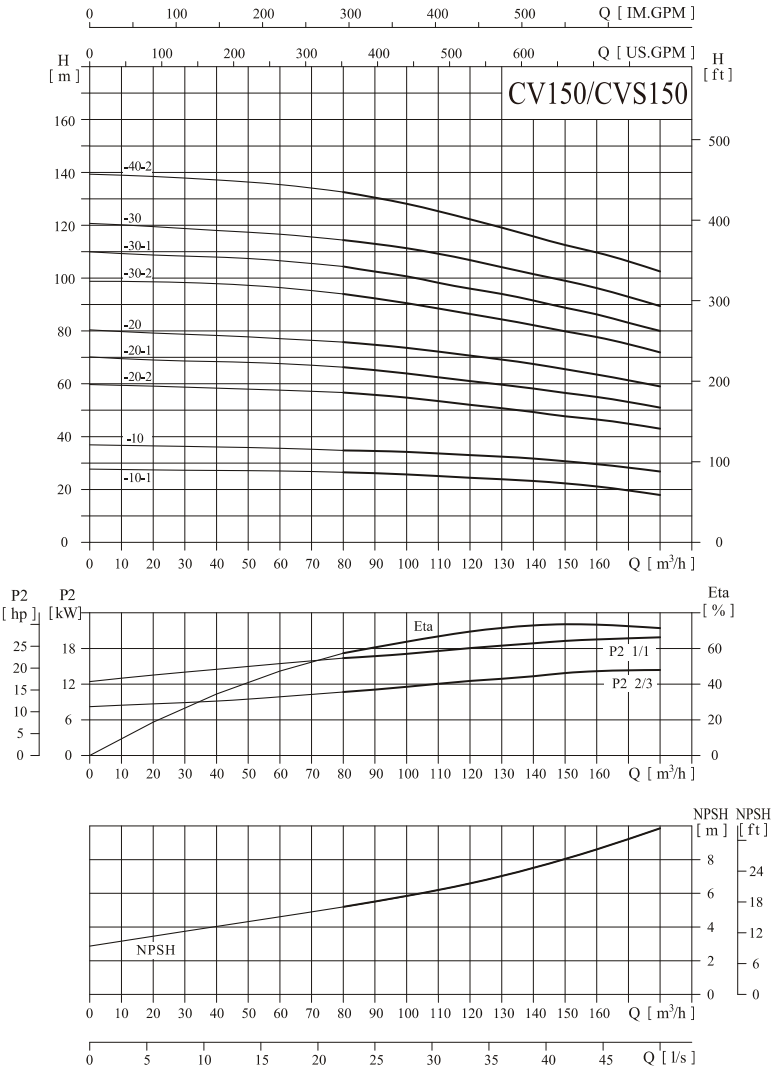

Installation sketch

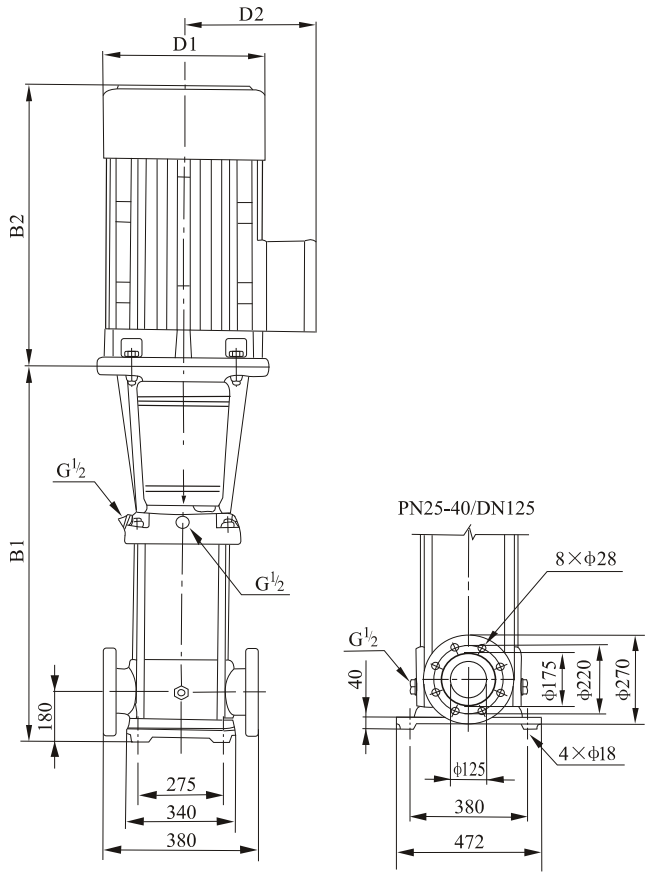

The overall dimensions of explosion-proof motor is a little different. Pls contact us for details.

Performance table

Model	Driving motor (kW)	Driving motor (hp)	Q (m³/h)	80	90	100	110	120	130	140	150	160	170	180
CVS 150-10-1	15	20	H (m)	26.5	26	25.7	25	24.3	23.8	23.2	22.3	21.2	19.5	18
CVS 150-10	22	30		35	34.5	34	33.6	33	32.3	31.7	30.7	29.6	28	27
CVS 150-20-2	30	40		57	55.5	53	52	51.3	50	49	48	47	45	43
CVS 150-20-1	37	50		67	65	63.5	62	61	60	58.5	56	55	53	51
CVS 150-20	45	60		75.5	74.5	73.6	72	70.4	69	67.5	65.5	63.5	61	59
CVS 150-30-2	55	75		94	92	90.5	88.4	86.4	83.8	81	80	78	75.3	72.5
CVS 150-30-1	75	100		104	102.5	100	98	96	94	92	89	87	84	80
CVS 150-30	75	100		114.4	113	111.3	109	106.5	104	101.5	99	96	93	89.4
CVS 150-40-2	75	100		133	130.3	127.6	124.6	121.7	118.3	115	112.5	110	106.3	102.5

Size and weight

Model	Size (mm) B1	B2	B1+B2	D1	D2	Weight (kg)
CVS150-10-1	840	490	1330	330	255	235
CVS150-10	840	590	1430	360	285	280
CVS150-20-2	1000	660	1660	400	310	360
CVS150-20-1	1000	660	1660	400	310	380
CVS150-20	1000	700	1700	460	340	435
CVS150-30-2	1190	770	1960	510	370	545
CVS150-30-1	1190	845	2035	580	410	665
CVS150-30	1190	845	2035	580	410	665
CVS150-40-2	1350	845	2195	580	410	680

Performance curve

ISO9906 Annex A 3540rpm

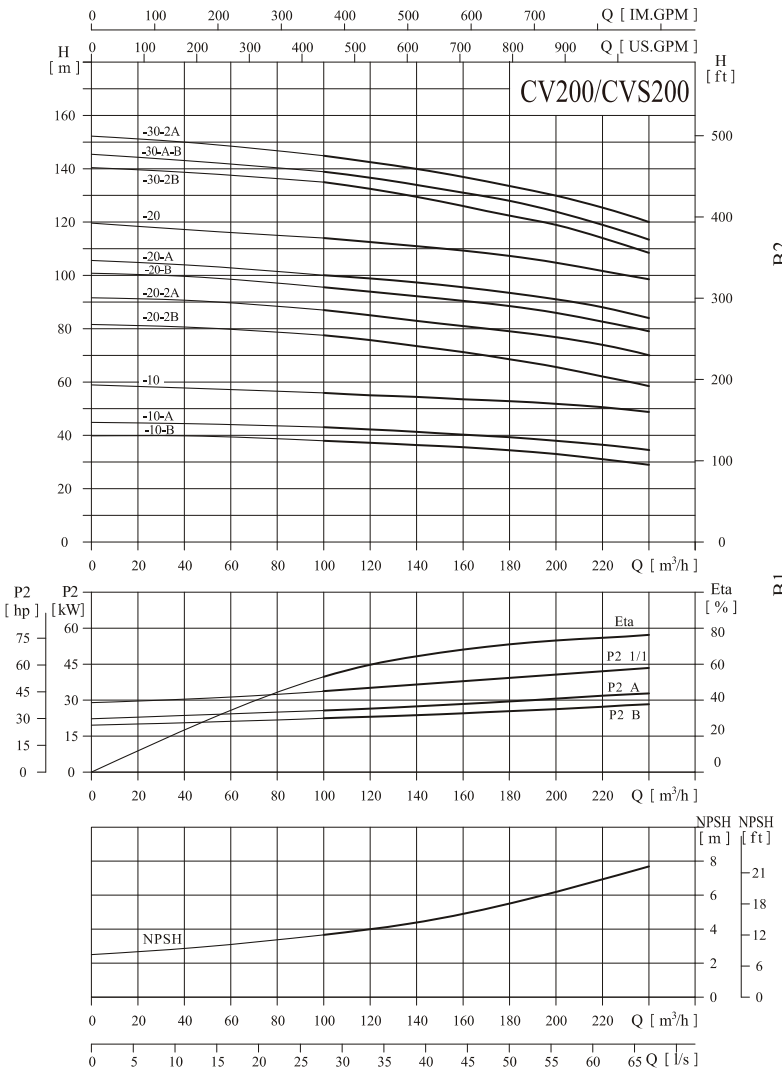

Installation sketch

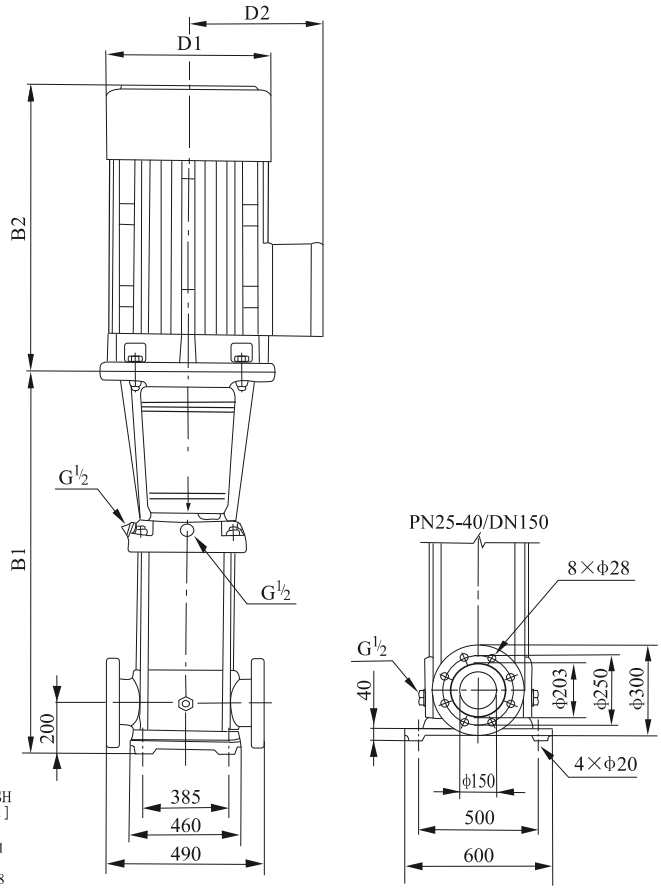

The overall dimensions of explosion-proof motor is a little different. Pls contact us for details.

Performance table

Model	Driving motor (kW)	Driving motor (hp)	Q (m³/h)	100	120	140	160	180	200	220	240
CVS 200-10-B	30	40	H (m)	38	37	36.5	35.5	34	33	31	29
CVS 200-10-A	37	50		43	42	41.5	40	39	38	36.5	34.5
CVS 200-10	45	60		56	55	54.5	53.5	53	52	50.5	48.5
CVS 200-20-2B	55	75		77.5	75.5	73.5	71	68.5	66	62	58.5
CVS 200-20-2A	75	100		87	85	83	81	79	77	74	70
CVS 200-20-B	75	100		95.5	93.5	92.5	90.5	88.5	86	82.5	79
CVS 200-20-A	90	120		100	98.5	97.5	95.5	93.5	91	88	84
CVS 200-20	90	120		114	112.5	111	109.5	107.5	105	101.5	98.5
CVS 200-30-2B	110	150		135	132.5	129.5	126	122.5	119	114	108.5
CVS 200-30-A-B	110	150		139	136.5	134	131	128	124	119	113.5
CVS 200-30-2A	110	150		145	142.5	140	137	133.5	130	125.5	120

Size and weight

Model	Size (mm) B1	B2	B1+B2	D1	D2	Weight (kg)
CVS200-10-B	907	660	1567	400	310	403
CVS200-10-A	907	660	1567	400	310	426
CVS200-10	907	700	1607	450	345	484
CVS200-20-2B	1131	770	1901	540	370	595
CVS200-20-2A	1131	845	1976	580	410	718
CVS200-20-B	1131	845	1976	580	410	718
CVS200-20-A	1131	895	2026	580	410	787
CVS200-20	1131	895	2026	580	410	787
CVS200-30-2B	1325	1140	2465	645	550	1158
CVS200-30-A-B	1325	1140	2465	645	550	1158
CVS200-30-2A	1325	1140	2465	645	550	1158

MEMO