中川泵浦

CHUNG CHUAN PUMP

ISO 9001:2000 認證

CHS型
不鏽鋼臥式多段離心泵浦

誠信・專業・創新

Trustworthy・Professional・Creative

Application

CHS,CHSK type pump are mainly used in industrial field:

- Air-conditioning system
- Cooling system
- Industrial cleaning
- Water treatment (Water purification)
- Aquiculture
- Fertilizing / metering system
- Environmental application
- Other special applications

Applicable medium

- Thin and clean non-flammable and non-explosive liquid without solid granules and fibers.
- Mineral water, soft water, pure water, edible vegetable oil and other light chemical mediums.
- When the density or viscosity of to-be-conveyed liquid is larger than that of water, it is necessary to select a driving motor of high-power.
- Whether a specific liquid is suitable for the pump depends on many factors, among which the most important ones are chlorine content, PH value, temperature, solvent and oil content.

Pump

- Horizontal multistage non-self-priming centrifugal pump, attached with long shaft electric motor.
- Compact structure renders small size of pump; axial inlet and radial outlet.

Curve conditions

Following conditions are suitable for the performance curves shown above.

- All curves are based on the measured values of 50Hz: constant motor speed 2900r/min,60 Hz: constant motor speed 3500 r/min;
- Curve tolerance in conformity with ISO9906Annex A.
- Measurement is done with 20℃ air-free water, kinematic viscosity of 1 mm^2/sec.
- The operation of pump shall refer to the performance region described by the thickened curve to prevent overheating due to too small flow rate or overload of motor due to too large flow rate.

Motor

- TEFC motor 2-pole
- Protection class:IP55
- Insulation class:F
- Standard voltage, 50Hz: 1×220-240V
  3×220-240V/380-415V
- Standard voltage, 60Hz: 1×220-240V
  3×220-240V/380-415V
- Single phase motor (max) : 2.4kW

Operation condition

- Liquid temperature:

Normal temperature type:-15℃~+70℃

Hot water type: +70℃~+110℃

- Ambient temperature: up to +40℃
- Max.operation pressure:10 bar
- Max.inlet pressure is limited by max. Operation pressure

Section drawing CHS/CHSK2,4

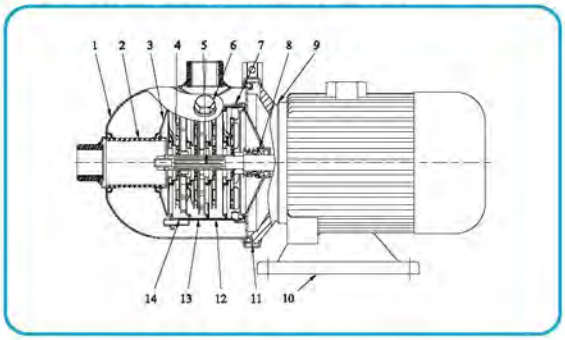

Section drawing CHS/CHSK8,12,16,20

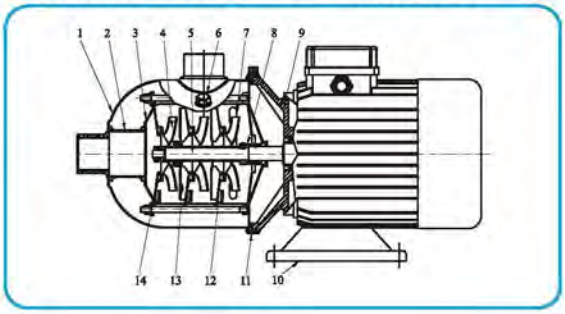

Definition of Model

CHS Example

CHS 4 – 30

- 30: Stage × 10
- 4: Rated flow m^3/h
- CHS: Light horizontal multistage centrifugal pump (Flow passage components stainless steel 304 or 316)

CHSK Example

CHS K 4 – 30

- 30: Stage × 10
- 4: Rated flow m^3/h
- K: Stainless steel air-conditioning pump
- CHS: Light horizontal multistage centrifugal pump (Flow passage components stainless steel 304 or 316)

Material CHS/CHSK

No.	Name	Material	AISI / ASTM
1	Inlet and outlet chamber	Stainless steel	AISI304(SUS316)
2	Connection pipe	Stainless steel	AISI304(SUS316)
3	Clamp plate	Stainless steel	AISI304(SUS316)
4	Impeller	Stainless steel	AISI304(SUS316)
5	Shaft	Stainless steel	AISI304(SUS316)
6	Gag	Stainless steel	AISI304(SUS316)
7	Discharge diffuser	Stainless steel	AISI304(SUS316)
8	Mechanical seal		
9	Motor end cover	Aluminum alloy	
10	Base plate	Cast iron	ASTM25B
11	Quick joint	Stainless steel	AISI304(SUS316)
12	Diffuser	Stainless steel	AISI304(SUS316)
13	Support diffuser	Stainless steel	AISI304(SUS316)
14	Inducer	Stainless steel	AISI304(SUS316)

※ 本公司有變更資料之權利，訂購前請先電話確認。

CHS 2 50Hz

Performance table

Model	Driving motor (kW)	Driving motor (hp)	Q (m³/h)	0.5	1.0	1.5	2.0	2.5	3.0	3.5
CHS 2-20	0.37	0.5	H (m)	19	18	16	14	13	11	9
CHS 2-30	0.55	0.75		28	27	24	21	20	17	14
CHS 2-40	0.55	0.75		36	34	32	28	26	23	17
CHS 2-50	0.55	0.75		46	43	40	35	33	28	22
CHS 2-60	0.75	1		54	50	48	42	38	33	25

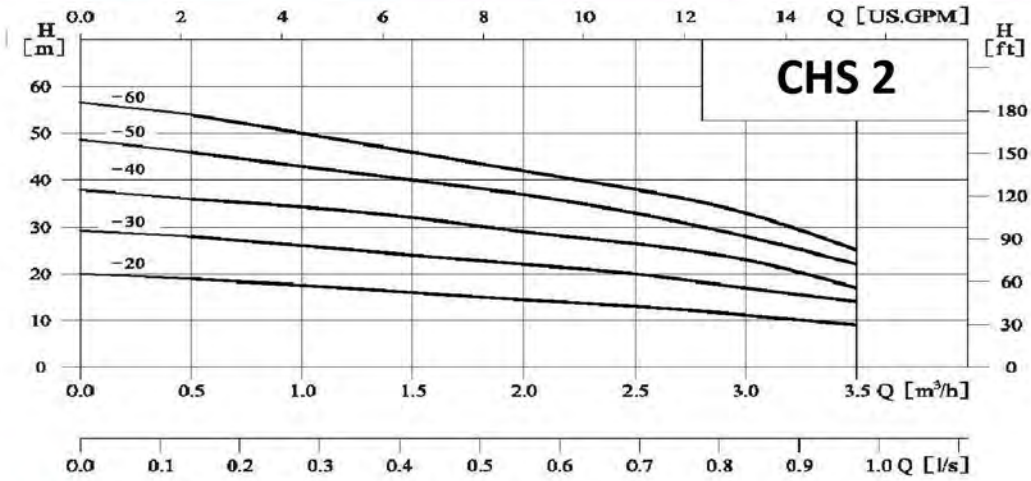

Installation sketch

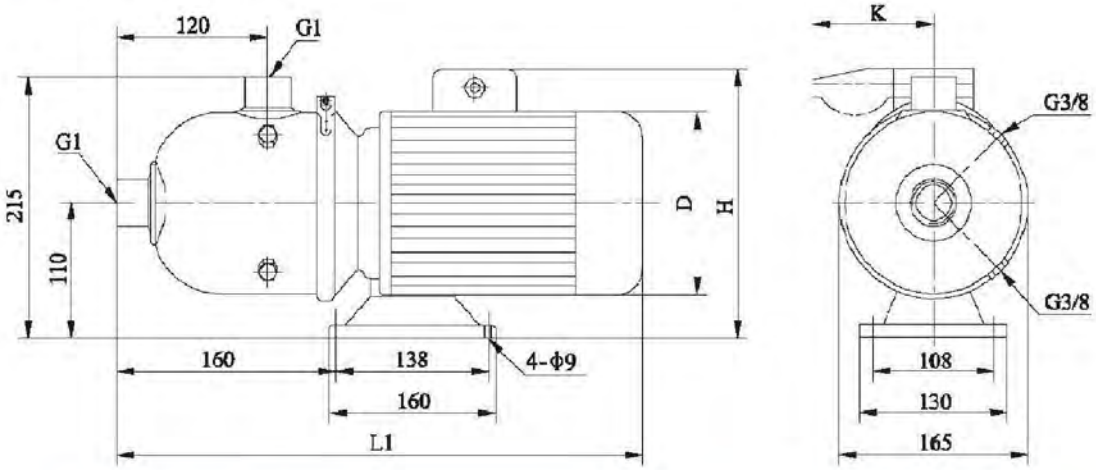

Size and weight

Motor	Model	Size (mm) L1	D	H	K	Weight (kg)
Three-phase/ single-phase	CHS 2-20	400	145	215/230	/96	13
	CHS 2-30	400	145	215/230	/96	13
	CHS 2-40	400	145	215/230	/96	13
	CHS 2-50	400	145	215/230	/96	13
	CHS 2-60	445	170	225/245	/100	15

※ 本公司有變更資料之權利，訂購前請先電話確認。

CHS 4 50Hz

Performance table

Model	Driving motor (kW)	Driving motor (hp)	Q (m³/h)	1	2	3	4	5	6	7
CHS 4-20	0.55	0.75	H (m)	19	18	16	15	13	10	7
CHS 4-30	0.75	1		28	27	24	22	19	15	10
CHS 4-40	0.75	1		38	36	32	30	26	20	14

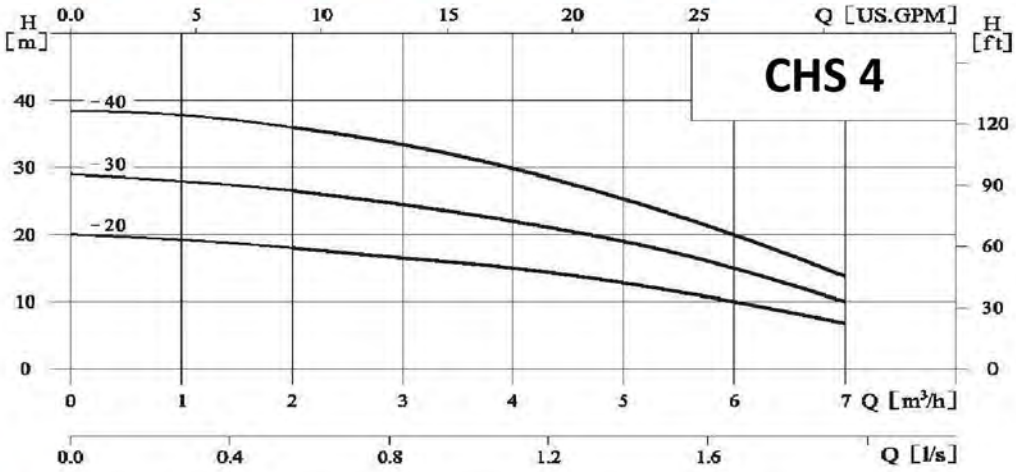

Installation sketch

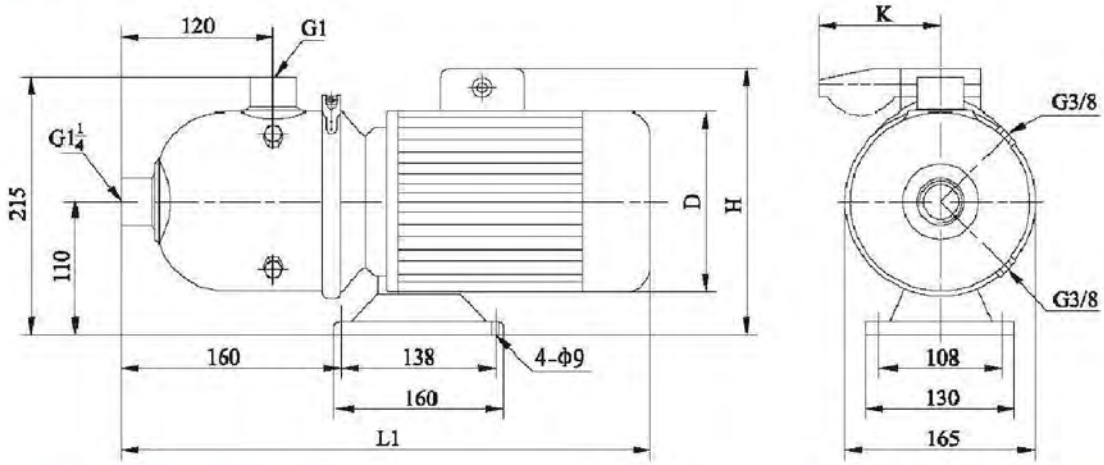

Size and weight

Motor	Model	Size (mm) L1	Size (mm) D	Size (mm) H	Size (mm) K	Weight (kg)
Three-phase/ single-phase	CHS 4-20	400	145	215/230	/96	12
	CHS 4-30	445	170	225/245	/100	15
	CHS 4-40	445	170	225/245	/100	15

※ 本公司有變更資料之權利，訂購前請先電話確認。

CHS 8 50Hz

Performance table

Model	Driving motor (kW)	Driving motor (hp)	Q (m³/h)	5	6	7	8	9	10	11
CHS 8-10	0.75	1	H (m)	9.5	9.3	9	8.5	7.5	6.5	5.5
CHS 8-20	0.75	1		19	18.5	18	17	15	13	11
CHS 8-30	1.1	1.5		29	28	27	25.5	22.5	20	17.5
CHS 8-40	1.5	2		39	38	36	34	30	26.5	22.5
CHS 8-50	2.2	3		49	47	45	42.5	38	33.5	28

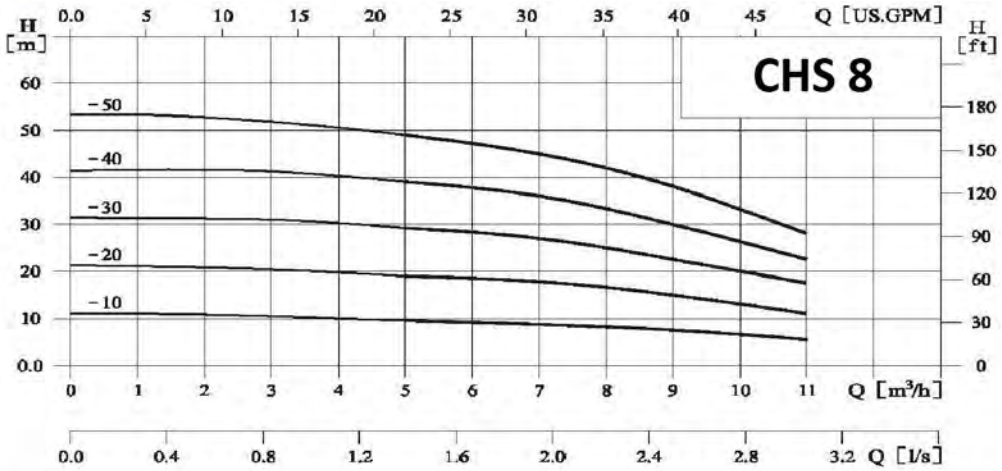

Installation sketch

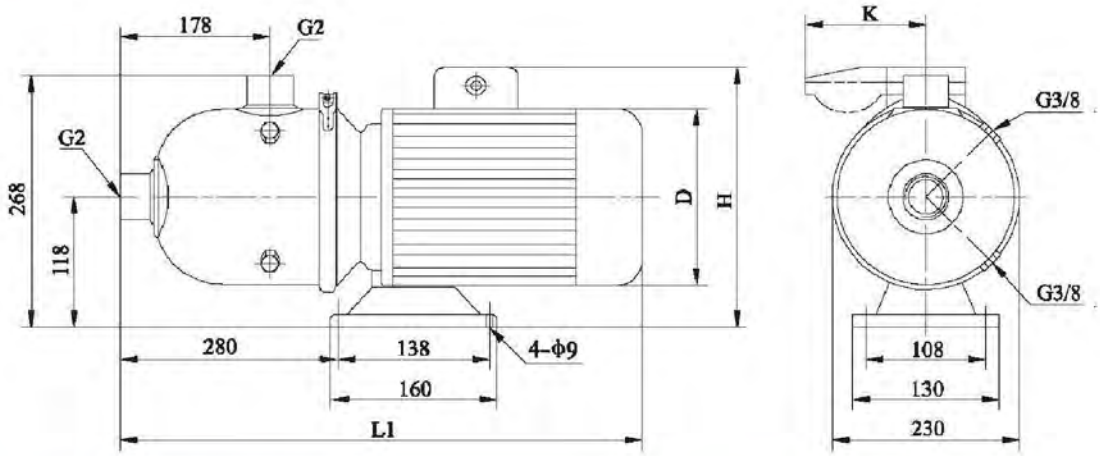

Size and weight

Motor	Model	Size (mm) L1	D	H	K	Weight (kg)
Three-phase/ single-phase	CHS 8-10	560	170	230/265	/100	20
	CHS 8-20	560	170	230/265	/100	20
	CHS 8-30	560	170	230/265	/100	25
	CHS 8-40	580	180	240/270	/100	25
	CHS 8-50	580	180	240/270	/100	30

※ 本公司有變更資料之權利，訂購前請先電話確認。

CHS12 50Hz

Performance table

Model	Driving motor (kW)	Driving motor (hp)	Q (m³/h)	7	8	9	10	11	12	13	14	15	16
CHS 12-10	0.75	1	H (m)	11.5	11.2	11	10.5	10	9.5	9	8	7	6
CHS 12-20	1.2	1.6		23	22.5	22	21.5	20.5	19.5	18.5	17	15.5	13
CHS 12-30	1.8	2.4		35	34.5	33.5	32.5	31	29.5	28	26	23.5	20
CHS 12-40	2.4	3.3		47	46	45	43.5	41.5	39.5	37.5	35	31.5	27.5
CHS 12-50	3	4		60	58	56.5	55	52.5	50	47	44	40	35

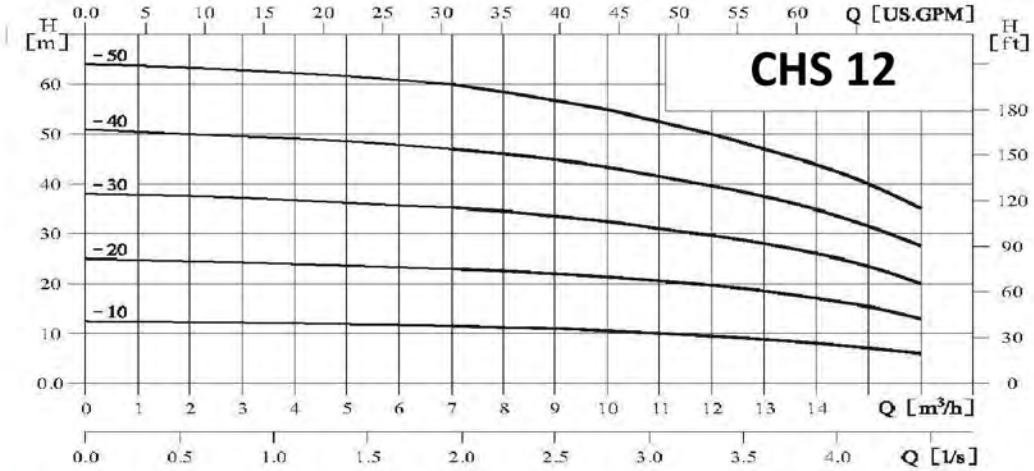

Installation sketch

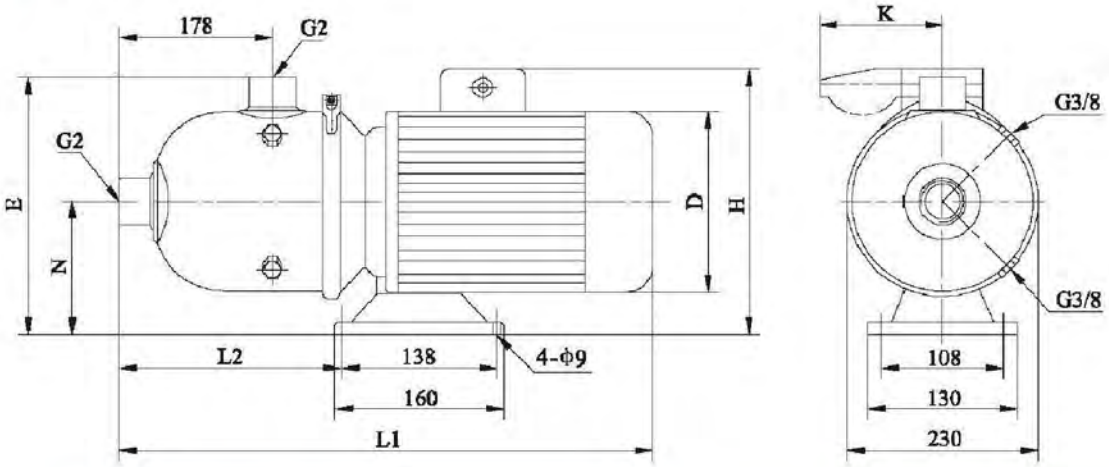

Size and weight

Motor	Model	Size (mm) L1	L2	H	D	E	N	K	Weight (kg)
Three-phase/ single-phase	CHS 12-10	560	280	230/265	170	268	118	/100	20
	CHS 12-20	560	280	230/265	170	268	118	/100	21
	CHS 12-30	580	280	240/270	180	268	118	/100	25
	CHS 12-40	580	280	240/270	180	268	118	/100	29
	CHS 12-50	610	270	270/	195	276	126		34

※ 本公司有變更資料之權利，訂購前請先電話確認。

CHS16 50Hz

Performance table

Model	Driving motor (kW)	Driving motor (hp)	Q (m³/h)	8	10	12	14	16	18	20	22
CHS 16-10	1.1	1.5	H (m)	12.5	12	11.5	10.5	10	9	7.5	6.5
CHS 16-20	2.2	3		25.5	24	23	22	21	19	17	14.5
CHS 16-30	3	4		38.5	37	36	34	32	30	27	23

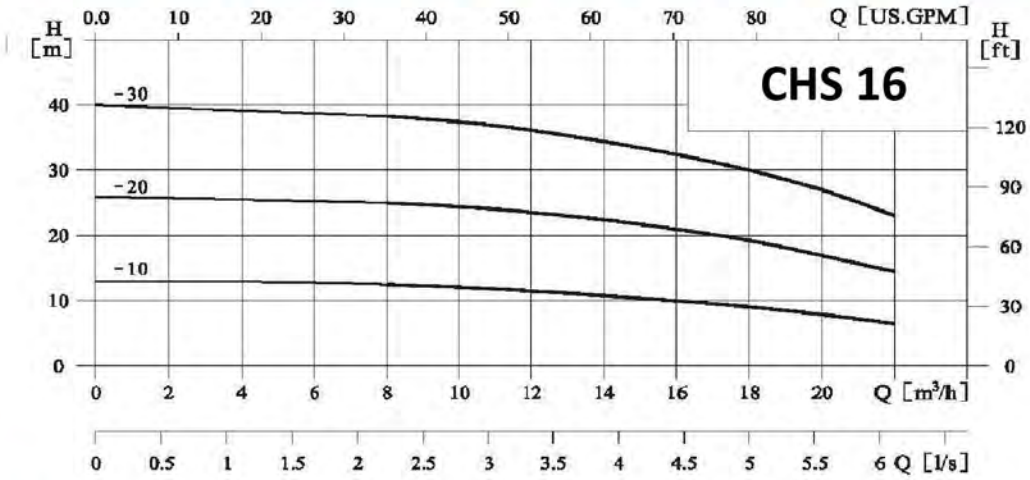

Installation sketch

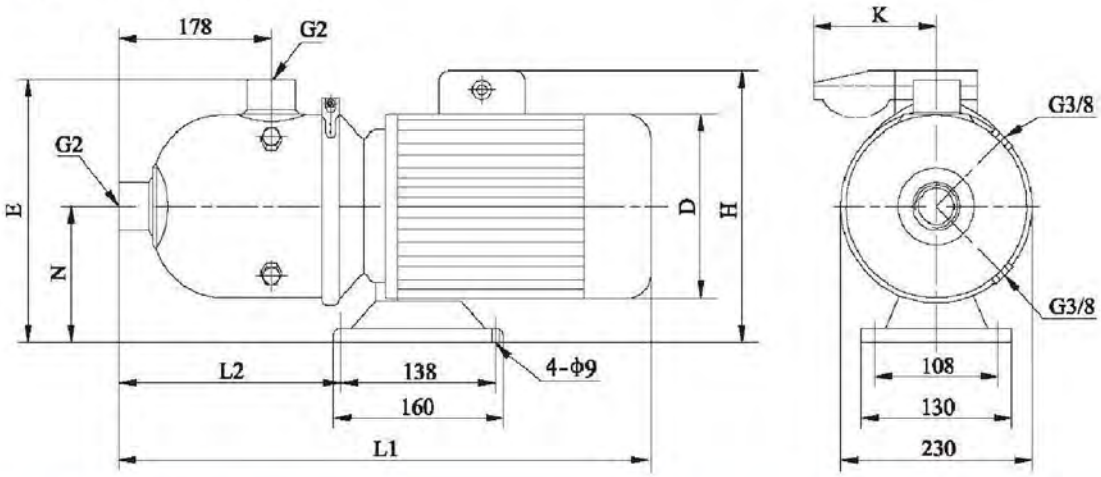

Size and weight

Motor	Model	Size (mm) L1	L2	E	N	D	H	K	Weight (kg)
Three-phase/ single-phase	CHS 16-10	560	280	268	118	170	230/265	/100	20
	CHS 16-20	580	280	268	118	180	240/270	/100	27
	CHS 16-30	610	270	276	126	195	270/	/100	34

※ 本公司有變更資料之權利，訂購前請先電話確認。

CHS20 50Hz

Performance table

Model	Driving motor (kW)	Driving motor (hp)	Q (m³/h)	10	12	14	16	18	20	22	24	26	28
CHS 20-10	1.1	1.5	H (m)	12.5	12	11.5	11	10.5	9.5	8.5	7.5	6.5	5.5
CHS 20-20	2.2	3		25.5	24.5	24	23	22	21	20	18	16	13.5
CHS 20-30	4	5.5		38	37.5	37	36	35	33	31	28	25	22

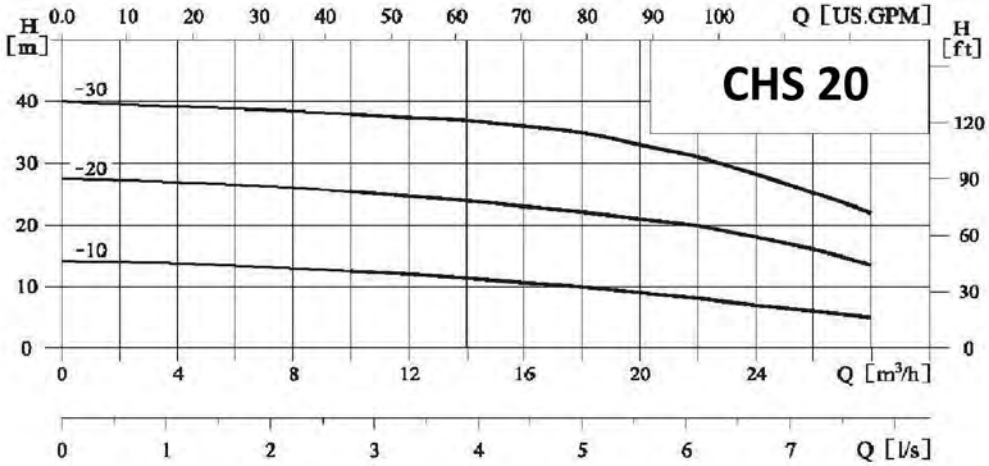

Installation sketch

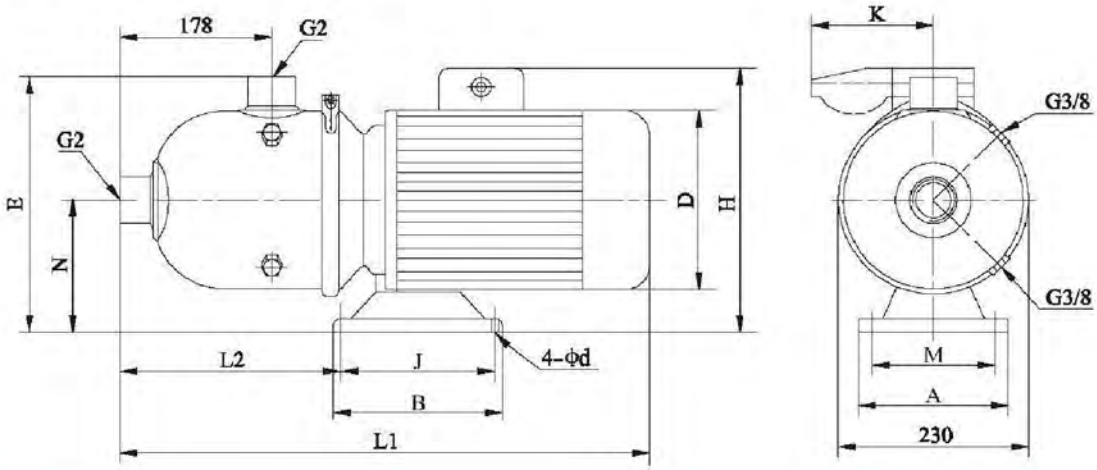

Size and weight

Motor	Model	Size (mm) L1	L2	H	D	E	N	A	M	B	J	d	K	Weight (kg)
Three-phase/ single-phase	CHS 20-10	560	280	230/265	170	268	118	130	108	160	138	9	/100	21
	CHS 20-20	580	280	240/270	180	268	118	130	108	160	138	9	/100	28
	CHS 20-30	650	360	270/	220	270	120	230	190	170	140	12		42

※ 本公司有變更資料之權利，訂購前請先電話確認。

CHS 2 60Hz

Performance table

Model	Driving motor (kW)	Driving motor (hp)	Q (m³/h)	1	1.5	2	2.5	3	3.5	4
CHS 2-20	0.55	0.75	H (m)	26	24	21	19	18	16	12
CHS 2-30	0.75	1		38	36	33	29	27	24	19
CHS 2-40	1.1	1.5		51	48	44	40	36	32	26
CHS 2-50	1.1	1.5		63	60	55	50	46	40	30
CHS 2-60	1.5	2		75	72	66	60	53	46	35

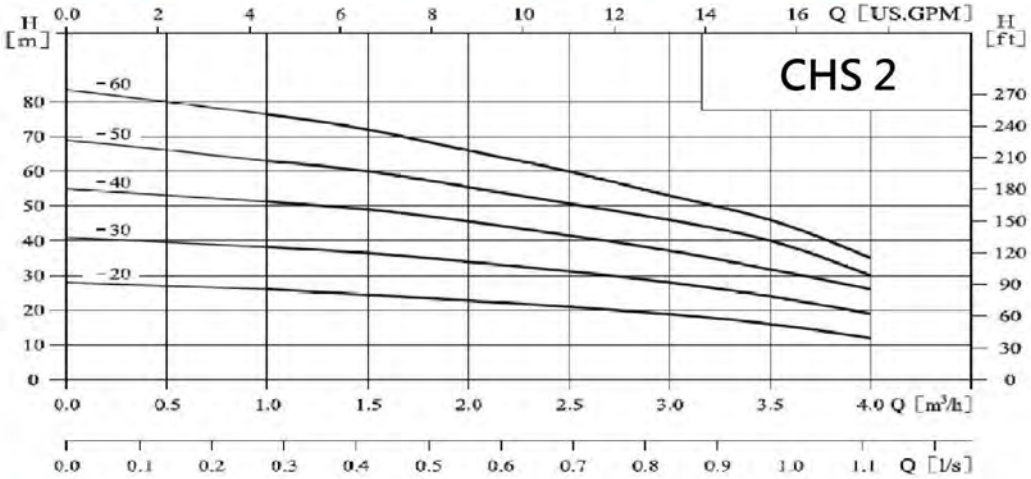

Installation sketch

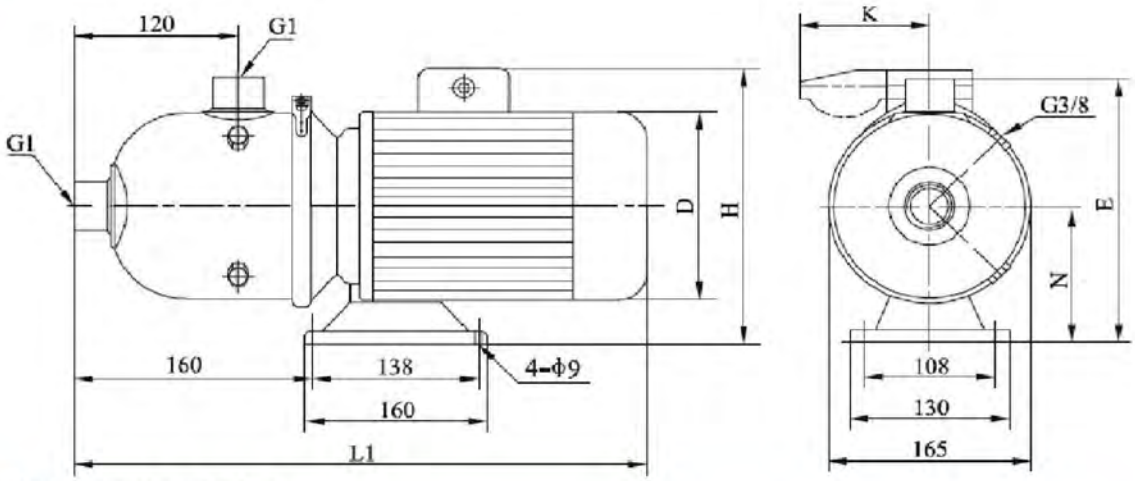

Size and weight

Motor	Model	Size (mm) L1	H	N	D	E	K	Weight (kg)
Three-phase/ single-phase	CHS 2-20	400	215/230	110	145	210	/96	13
	CHS 2-30	420	220/245	110	160	210	/100	13
	CHS 2-40	420	230/245	110	170	210	/100	15
	CHS 2-50	420	230/245	110	170	210	/100	15
	CHS 2-60	470	240/260	118	170	218	/100	20

※ 本公司有變更資料之權利，訂購前請先電話確認。

CHS 4 60Hz

Performance table

Model	Driving motor (kW)	Driving motor (hp)	Q (m³/h)	2	3	4	5	6	7	8
CHS 4-20	0.75	1	H (m)	26	24	22	21	19	16	12
CHS 4-30	1.1	1.5		39	36	33	31	28	23	18
CHS 4-30	1.5	2		53	49	44	42	38	31	24

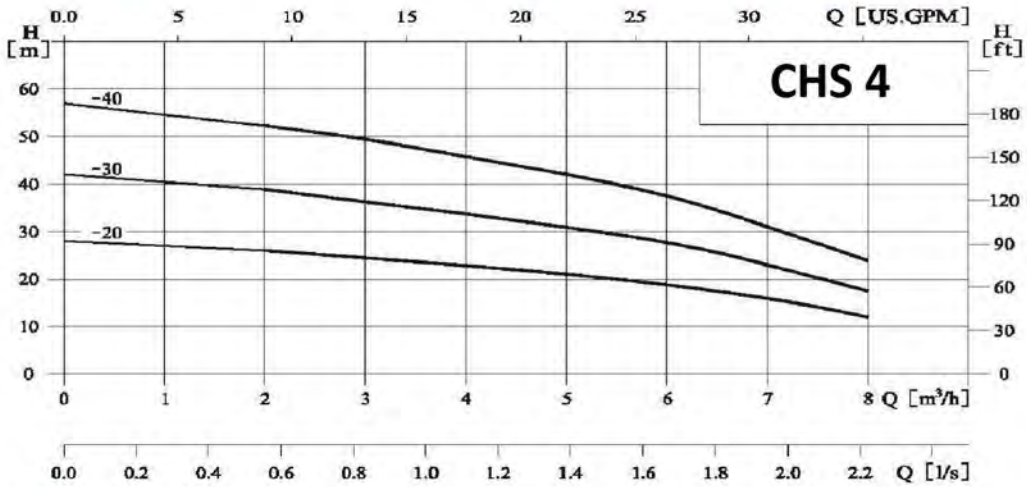

Installation sketch

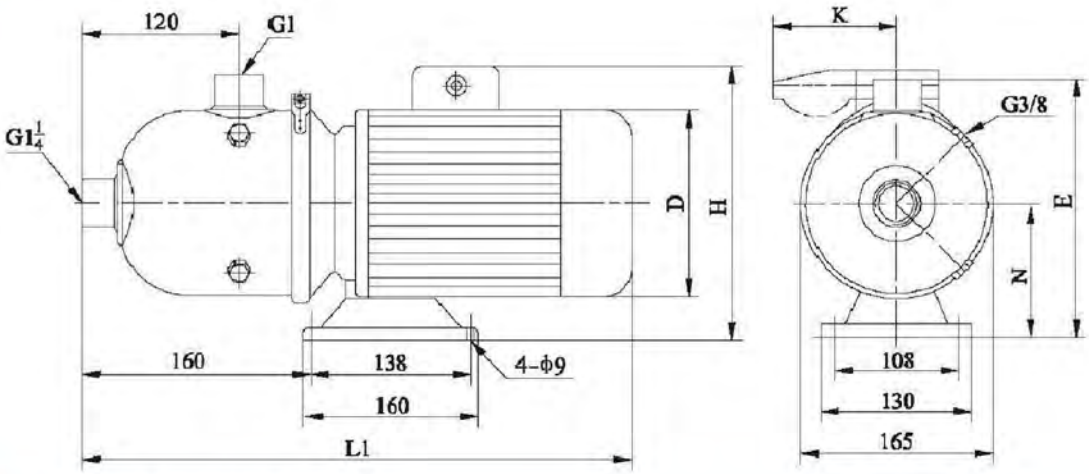

Size and weight

Motor	Model	Size (mm) L1	H	N	D	E	K	Weight (kg)
Three-phase/ single-phase	CHS 4-20	420	230/245	110	160	210	/100	12
	CHS 4-30	420	230/245	110	170	210	/100	15
	CHS 4-30	470	240/260	118	170	228	/100	20

※ 本公司有變更資料之權利，訂購前請先電話確認。

CHS 8 60Hz

Performance table

Model	Driving motor (kW)	Driving motor (hp)	Q (m³/h)	6	7	8	9	10	11	12	13
CHS 8-10	0.75	1	H (m)	14	13	12	11.5	11	10	9	8
CHS 8-20	1.5	2		27	26	25	24	23	21	19	16
CHS 8-30	2.2	3		41	40	39	37	34	33	29	25
CHS 8-40	3	4		55	54	52	50	45	43	39	33
CHS 8-50	3	4		69	67	65	62	55	53	49	40

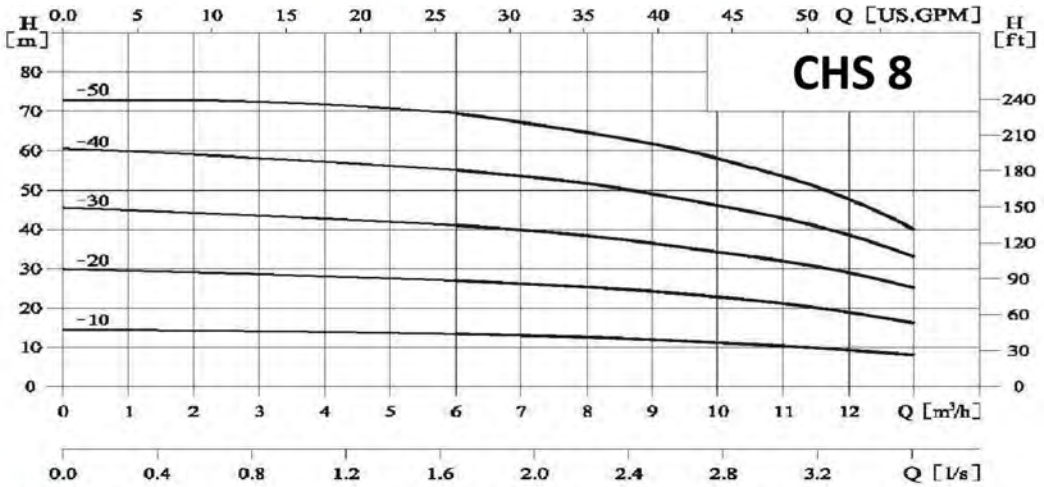

Installation sketch

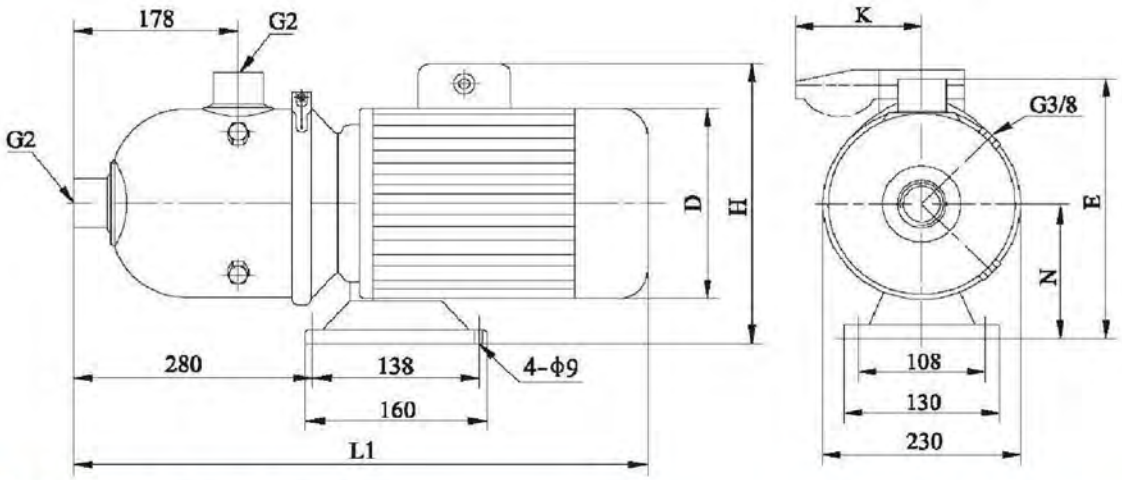

Size and weight

Motor	Model	Size (mm) L1	H	N	D	E	K	Weight (kg)
Three-phase/ single-phase	CHS 8-10	560	230/265	117	160	263	/100	20
	CHS 8-20	580	230/270	118	170	264	/100	25
	CHS 8-30	580	230/270	118	180	264	/100	25
	CHS 8-40	610	270/	128	195	274	/100	30
	CHS 8-50	610	270/	128	195	274	/100	30

※ 本公司有變更資料之權利，訂購前請先電話確認。

CHS 12 60Hz

Performance table

Model	Driving motor (kW)	Driving motor (hp)	Q (m³/h)	7	9	11	12	13	15	17	19
CHS 12-10	1.1	1.5	H (m)	17	16.5	16	15	14.5	13	11.5	8.5
CHS 12-20	2.2	3		34	33	32	31	30	27	24.5	19
CHS 12-30	3	4		52.5	50	48.5	47	45	41.5	37.5	29
CHS 12-40	4	5.5		69	67.5	65	63	60.5	56	50	40
CHS 12-50	5.5	7.5		88	85	82	80	76	70.5	63	50.5

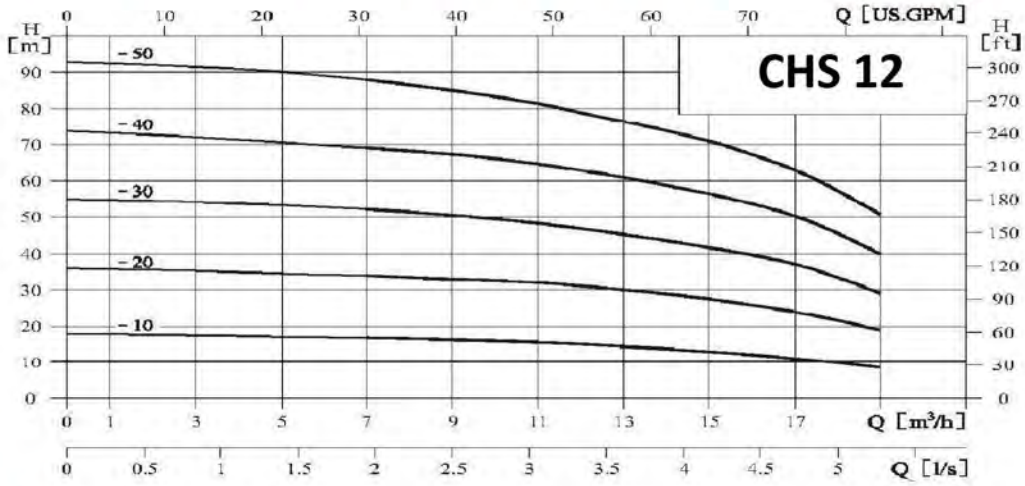

Installation sketch

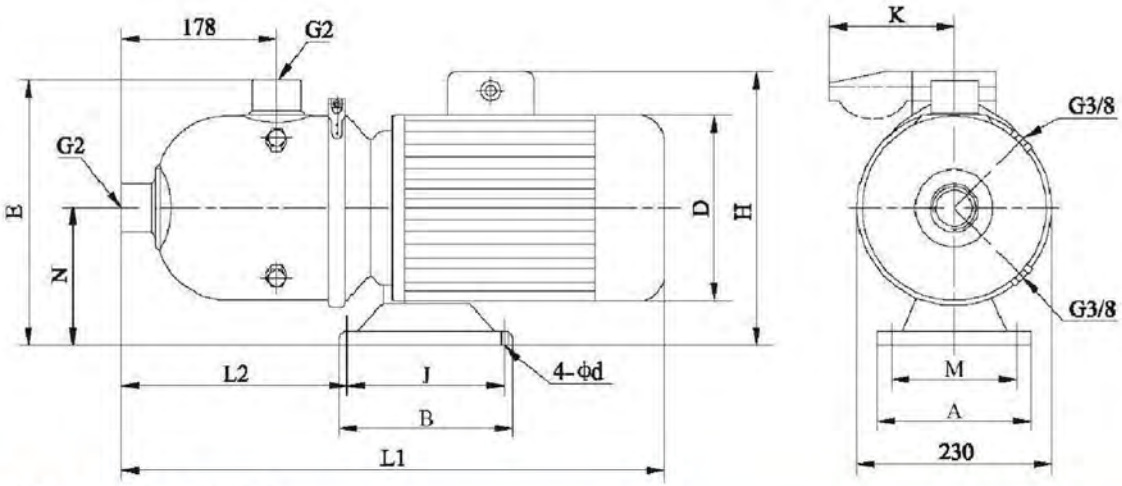

Size and weight

Motor	Model	Size (mm) L1	L2	H	D	E	N	A	M	B	J	d	K	Weight (kg)
Three-phase/ single-phase	CHS 12-10	560	280	230/265	180	268	118	130	108	160	138	9	/100	22
	CHS 12-20	580	280	240/270	180	268	118	130	108	160	138	9	/100	25
	CHS 12-30	610	270	270/	195	276	126	130	108	160	138	9		32
	CHS 12-40	650	360	270/	220	270	120	230	190	170	140	12		44
	CHS 12-50	670	375	305/	255	282	132	260	216	190	140	12		58

※ 本公司有變更資料之權利，訂購前請先電話確認。

CHS 16 60Hz

Performance table

Model	Driving motor (kW)	Driving motor (hp)	Q (m³/h)	8	12	16	20	24	28
CHS 16-10	2.2	4	H (m)	17	16	15	13	11	8
CHS 16-20	4.0	5.5		33	31	29	26	21	17
CHS 16-30	5.5	7.5		49	47	44	39	32	25

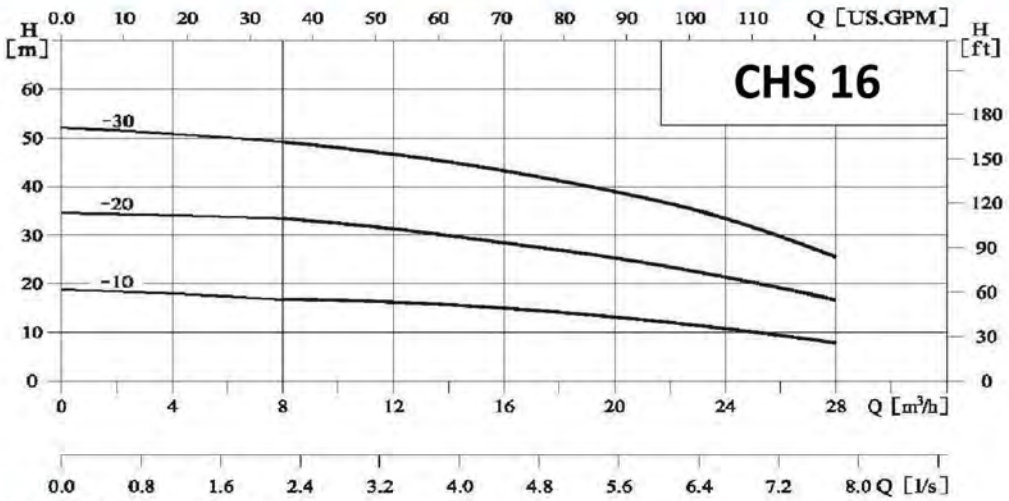

Installation sketch

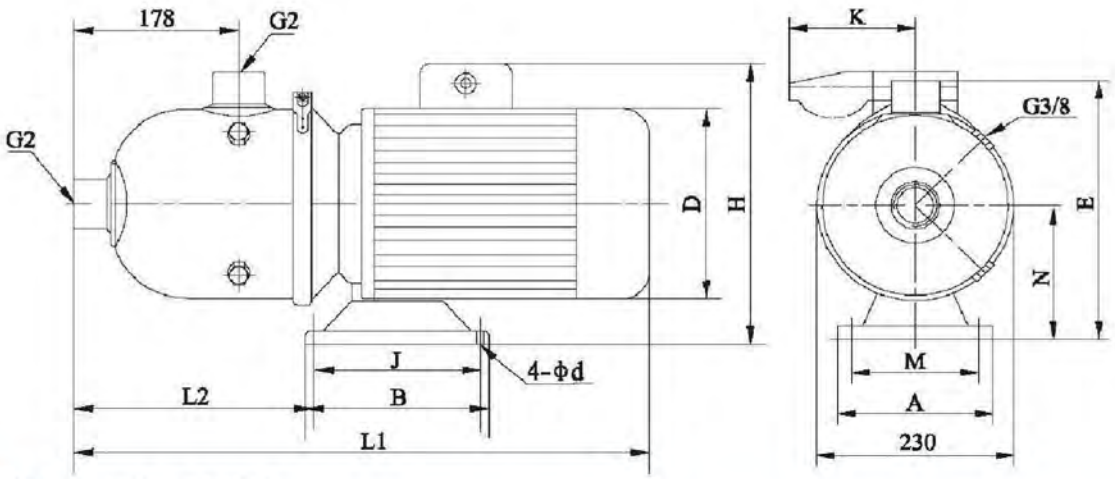

Size and weight

Motor	Model	Size (mm) L1	L2	H	E	B	D	J	A	M	N	d	K	Weight (kg)
Three-phase/ single-phase	CHS 16-10	580	280	230/270	264	160	180	138	130	108	118	9	/100	25
	CHS 16-20	650	360	270/	270	170	220	140	230	190	120	12		43
	CHS 16-30	670	375	305/	281	190	255	140	260	216	132	12		50

※ 本公司有變更資料之權利，訂購前請先電話確認。

CHS 20 60Hz

Performance table

Model	Driving motor (kW)	Driving motor (hp)	Q (m³/h)	12	14	16	18	20	22	24	26	28	30	32
CHS 20-10	2.2	3	H (m)	18	17	16.5	16	15.5	14.5	13.5	12.5	11.5	10	9
CHS 20-20	4	5.5		37	36	35	34	32.5	31.5	30	29	27.5	24.5	22
CHS 20-30	5.5	7.5		55	54.5	54	53	51.5	50.5	48	45.5	42	38.5	34

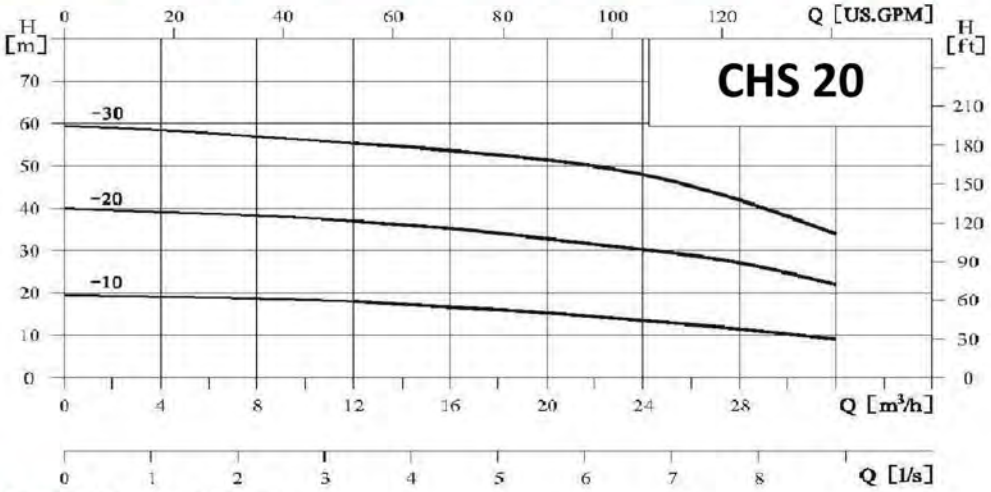

Installation sketch

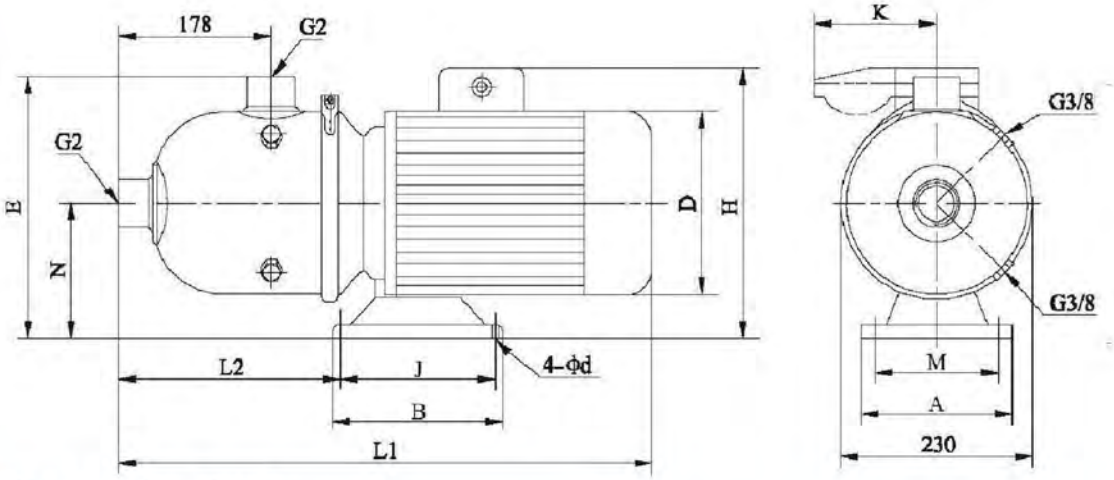

Size and weight

Motor	Model	Size (mm) L1	L2	H	D	E	N	A	M	B	J	d	K	Weight (kg)
Three-phase/ single-phase	CHS 20-10	580	280	240/270	180	268	118	130	108	160	138	9	/100	26
	CHS 20-20	650	360	270/	220	270	120	230	190	170	140	12		43
	CHS 20-30	670	375	305/	255	282	132	260	216	190	140	12		56

※ 本公司有變更資料之權利，訂購前請先電話確認。